SPOKANE COUNTY

2010 WASTEWATER FACILITIES PLAN AMENDMENT

Prepared for:
Spokane County
Division of Utilities
1026 West Broadway Avenue
Spokane, WA 99260

FINAL
June 16, 2010

Prepared by:

HDR
412 East Parkcenter Blvd., Suite 100
Boise, ID 83706
(208) 387-7000

SPOKANE COUNTY

DAVID L. CLARK
STATE OF WASHINGTON
21798
REGISTERED
PROFESSIONAL ENGINEER

EXPIRES 4/3/2012

2010 WASTEWATER FACILITIES PLAN AMENDMENT

Prepared for:
Spokane County
Division of Utilities
1026 West Broadway Avenue
Spokane, WA 99260

FINAL
June 16, 2010

Prepared by:
HDR
412 East Parkcenter Blvd., Suite 100
Boise, ID 83706
(208) 387-7000

Table of Contents

EXECUTIVE SUMMARY
Executive Summary ES-1
CHAPTER 2 – BASIS OF PLANNING
A2.1 Basis of Planning Report A2-1
A2.5 Water Quality and Water Resource Issues A2-1
A2.5.3 Dissolved Oxygen Total Maximum Daily Load (TMDL) A2-2
A2.5.4 Foundational Concepts for the Spokane River TMDL Managed Implementation Plan A2-2
A2.5.5 Potential Spokane River Effluent Discharge Requirements A2-4
A2.7 Effluent Reuse A2-11
A2.8 Biosolids Management A2-11
A2.9 Appendix A2-12
A2.10 References A2-12
CHAPTER 6 – TREATMENT SYSTEMS
A6.1 Introduction A6-1
A6.2 Advanced Wastewater Treatment Process Performance A6-1
A6.3 Advanced Wastewater Treatment Process Evaluation A6-2
A6.3.9 Selected Treatment Process A6-3
A6.4 Projected Effluent Performance A6-3
A6.4.1 Design Flows and Loads A6-3
A6.4.2 Process Schematics A6-4
A6.4.3 Mass Balance A6-4
A6.4.4 Unit Process Design Criteria A6-4
A6.5 Preliminary Site Layout A6-13
A6.6 Summary Description of Unit Processes A6-13
A6.6.1 Influent Flow Measurement and Influent Junction Box A6-14
A6.6.2 Septage Handling A6-14
A6.6.3 Preliminary Treatment A6-14
A6.6.4 Primary Treatment A6-14
A6.6.5 Fine Screening A6-15
A6.6.6 Secondary Treatment including Membrane Bioreactors A6-15
A6.6.7 Effluent Flow Measurement A6-15
A6.6.8 Disinfection and Dechlorination A6-15
A6.6.10 Reclaimed Water Pumping A6-16
A6.6.11 Chemical Feed Systems A6-16
A6.6.12 Primary Sludge and Waste Activated Sludge Thickening A6-16
A6.6.14 Anaerobic Digestion A6-16
A6.6.15 Aerobic Digestion/Liquid Biosolids Storage A6-16
A6.6.16 Digester Gas Management A6-16
A6.6.17 Solids Dewatering A6-17
A6.6.18 Dewatered Biosolids Storage A6-17
A6.7 Aesthetic Concept and Impact Mitigation Measures A6-21
A6.7.1 Architecture A6-21
A6.7.2 Landscaping A6-21

A6.7.3 Odor Control A6-21
CHAPTER 7 – BIOSOLIDS MANAGEMENT
A7.1 Introduction A7-1
A7.2 Projected Sludge Quantity and Characteristics A7-1
A7.3 Summary of Regulations A7-2
A7.5 Recommended Biosolids Alternative A7-2
CHAPTER 9 – RECOMMENDED PLAN
A9.1 Introduction A9-1
A9.3 Conveyance and Treatment A9-2
A9.3.1 Overview A9-2
A9.3.2 Conveyance A9-3
A9.4 Treatment A9-5
A9.4.1 City of Spokane Riverside Park Water Reclamation Facility (RPWRF) A9-5
A9.4.2 New Spokane County Regional Water Reclamation Facility A9-5
A9.4.3 Effluent Outfall to the Spokane River A9-8
A9.5 Management of Reclaimed Water A9-8
A9.6 Biosolids Management A9-8
A9.7 Cost Estimate A9-9
A9.7.1 Capital A9-9
A9.7.2 Estimated Operating and Maintenance Costs A9-11
A9.8 Expected Performance and Water Quality Issues A9-12
CHAPTER 11 – PHOSPHORUS MANAGEMENT PLAN
A11.1 Introduction A11-1
A11.2 Target Pursuit Actions A11-1
A11.2.1 Septic Tank Elimination Program (STEP) A11-3
A11.2.2 Treatment Technology A11-3
A11.2.3 Other Target Pursuit Actions A11-4
A11.3 Projected Phosphorus Load to the Spokane River A11-11
A11.3.1 Potential Treatment Technology Advances A11-11
CHAPTER 12 – DISSOLVED OXYGEN TMDL PARAMETERS
A12.1 Introduction A12-1
A12.2 Spokane County Dissolved Oxygen Parameters A12-2
A12.3 Connection between SCRWRF and Lake Spokane A12-3
A12.4 Water Quality Complexity A12-3
A12.5 Modeling of Equivalent Parameters A12-4
A12.5.1 Future Modeling of Equivalent Parameters A12-6
A12.6 Delta Elimination Plan A12-6
A12.6.1 Treatment Technology Selection A12-7
A12.6.2 Delta Elimination Plan for Phosphorus A12-8
A12.7 References A12-9

List of Tables

Table ES-1 Projected Effluent Performance Requirements for Spokane County Regional Water Reclamation Facility ES-3
Table A2-7 Wasteload Allocation Table from Spokane River and Lake Spokane Dissolved Oxygen Water Quality Improvement Report (2010) A2-3
Table A2-10 Comparison of the City of Spokane NPDES Permit, the 2010 Lake Spokane TMDL, the DBO Performance Guarantee A2-5
Table A2-8 Proposed Effluent Quality Limits for SCRWRF Discharge to the Spokane River A2-10
Table A6-3 Projected Flows and Loadings A6-5
Table A6-4 Summary of Design Criteria A6-6
Table A6-5 Liquids and Solids Mass Balance A6-19
Table A7-3 Biosolids Haul Truck Trips for 8 mgd Plant A7-3
Table A7-4 Estimated Annual Costs for Biosolids Hauling and Land Application A7-4
Table A9-3 Summary of Estimated Capital Costs of Spokane County Regional Water Reclamation Facility A9-11
Table A9-4 Summary of Projected Operation and Maintenance Costs for Spokane County Regional Water Reclamation Facility A9-12
Table A9-5 Summary of Projected Operation and Maintenance Costs for NVI and SVI Pumping Stations A9-12
Table A11-1 Spokane County *"Target Pursuit Actions"* from the *"Foundational Concepts for the Spokane River TMDL Managed Implementation Plan"* A11-2
Table A11-2 Phosphorus Load Reduction to the Spokane River Resulting from Sewer Connections of Septic Systems A11-3
Table A11-3 Phosphorus Load Reduction through Plumbing Code Enforcement A11-5
Table A11-4 Monthly Water Demand and Phosphorus Load Reduction through Irrigation with Reclaimed Water A11-6
Table A11-5 Phosphorus Load Reduction through Reclaimed Water Irrigation A11-7
Table A11-6 Phosphorus Load Reduction by Accounting for Soluble, Nonreactive Phosphorus A11-8
Table A11-7 Phosphorus Load Reduction through Source Control Programs A11-9
Table A11-8 Phosphorus Load Reduction through Regulation of Fertilizers A11-10
Table A11-9 Summary of Potential Phosphorus Load Reductions to the Spokane River from Potential P Reduction Activities A11-12

List of Figures

Figure A6-6 Schematic of WWTP Process Design A6-4
Figure A9-1 Wastewater Flow Schematic Diagram of the Recommended Plan (Distribution Based on Spokane County Future Projected 2030 Flows) A9-2
Figure A9-2 Locations of Major Facilities A9-3
Figure A9-3 Selected Treatment Process for the Spokane County Water Reclamation Facility (SCRWRF) A9-6

List of Drawings

Figure A6-1 Overall Liquids Process Schematic A6-23
Figure A6-2 Overall Solids Process Schematic..... A6-24
Figure A6-3 Final Site Layout Rendering A6-25

INTRODUCTION

Spokane County Utilities Division provides wastewater management for residential, commercial and industrial customers in the Spokane Valley and North Spokane service areas through an interlocal agreement with the City of Spokane. Currently, wastewater generated in the County is sent, via a sewer network, to the Riverside Park Water Reclamation Facility (RPWRF), which is operated by the City of Spokane. A 1980 inter-local agreement established the basis for the City to treat up to 10 million gallons per day of County generated wastewater. The County may exceed that capacity by the end of 2013. Due to physical, environmental and implementation constraints, additional capacity at the RPWRF may not be available for use by the County, or may be insufficient for the County's long-term needs.

The previously published *2006 Wastewater Facilities Plan Amendment* addressed requirements for the Spokane County Regional Water Reclamation Facility (SCRWRF) to meet the low phosphorus limits outlined in the *Foundational Concepts for the Spokane River TMDL Managed Implementation Plan* document. The previous seasonal target for effluent phosphorus, as defined in the *Foundation Concepts* document, was set at 0.010 mg/L (April-October). Since the completion of the 2006 Amendment, several changes have occurred that affect the County's plan. These changes include:

- The selection of a step-feed nitrification/denitrification treatment system with membrane filtration and chlorination as the low phosphorus treatment alternative;
- DBO contractor selection and construction initiation for the SCRWRF; and
- The publication of the February 2010 *Spokane River and Lake Spokane Dissolved Oxygen Total Maximum Daily Load Water Quality Improvement Report (Final TMDL).*

The *Final TMDL* wasteload allocation for the Spokane County Regional Water Reclamation Facility is based on an effluent phosphorus seasonal average of 0.042 mg/L (March-October). This 2010 Amendment addresses any updates to the prior facilities plan that have come from the previously listed changes. Revisions to the *2006 Wastewater Facilities Plan Amendment* include the following chapters:

- Executive Summary
- Chapter 2: Basis of Planning
- Chapter 6: Treatment Systems
- Chapter 7: Biosolids Management
- Chapter 9: Recommended Plan
- Chapter 11: Phosphorus Management Plan
- Chapter 12: Dissolved Oxygen TMDL Parameters

The 2010 Amendment only addresses the changes that are necessary to demonstrate compliance with the *Final TMDL* and as necessary to be consistent with the DBO contract authorization, and is not an entirely new facilities plan. This 2010 Amendment is provided as a supplement to the *2006 Wastewater Facilities Plan Amendment.*

Purpose of the 2010 Amendment

This 2010 Amendment is presented to make those changes to the *2006 Wastewater Facilities Plan Amendment* necessary to demonstrate full compliance with WAC 173-98, full compliance with the Final TMDL, and full compliance with the Federal Clean Water Act. Spokane County anticipates that this 2010 Amendment will result in an approval of the Spokane County Wastewater Facilities Plan, including all amendments thereto, and the execution of a State Revolving Fund Loan Agreement consistent with the Memorandum of Understanding executed in December 2008 between Ecology and Spokane County.

Basis of Planning

The Basis of Planning chapter provides all of the necessary background information to define the SCRWRF needs for the chosen planning horizon. Information regarding the *Final TMDL* was updated and more detail was included in this 2010 Amendment. Changes were made to reflect the *Final TMDL* seasonal effluent phosphorus target of 0.042 mg/L which is equivalent to 2.80 lb/day, over the months of March through October. The updated wasteload allocations for ammonia nitrogen, total phosphorus and CBOD are included. In 2009, the *Spokane County Reclaimed Water Use Study* was published and the *Aquifer Recharge Analysis* is currently under review. The information included in these separate documents was changed in the Basis of Planning. Finally, the biosolids management was changed to reflect the current State of Washington requirements. Information in three of the tables were updated to reflect the *Final TMDL* as well as the anticipated effluent quality limits and a comparison of the TMDL, the City of Spokane's NPDES Permit for the Riverside Park Facility, and the DBO performance guarantee.

Spokane County conducted a water quality modeling effort using CE-QUAL-W2 to examine the effect of alternative Spokane County effluent limits on dissolved oxygen concentrations. The TMDL wasteload allocation assumes very low concentrations of effluent ammonia nitrogen (0.83 mg/l) in the Spring (the month of March). From a wastewater treatment process standpoint, this may be difficult to achieve because the nitrification process is very sensitive to wastewater temperatures and reaction rates slow significantly with cooler temperature. Consequently, March ammonia limitations may control overall treatment process sizing and result in over-sizing of activated sludge reactors that provide no additional water quality benefit. For these reasons, higher March effluent ammonia limits for the SCRWRF may be more appropriate and provide the same level of water quality protection in the Spokane River and Lake Spokane.

To demonstrate this, alternative effluent discharge scenarios were modeled to investigate the sensitivity of Lake Spokane dissolved oxygen concentrations to changes in March effluent ammonia discharges from the SCRWRF. The modeling results presented in Chapter 2 and Appendix A2 indicate that the alternative discharge limits for Spokane County would not

decrease dissolved oxygen in Long Lake, and may in fact cause a slight increase. The reason for this water quality improvement is the significant decrease in CBOD concentration in the effluent from the SCRWRF (2 mg/l) compared to the TMDL wasteload allocation scenario (4.2 mg/l) as discussed in Chapter 12. The effect of lower CBOD concentration partially offsets the increased ammonia discharge in March. The water quality modeling analysis using CE-QUAL-W2 demonstrates that the revised SCRWR effluent characteristics result in dissolved oxygen concentrations in Lake Spokane that are the same, or better than the TMDL wasteload allocation.

Treatment Systems

The *2006 Wastewater Facilities Plan Amendment* included several alternatives for achieving extremely low phosphorus levels based on the Draft TMDL while still utilizing the County's current 10 mgd capacity allocation at the RPWRF. Following the finalization of the 2006 Amendment, a treatment system was selected, a DBO contractor was hired, and construction has begun. The projected effluent performance requirements for the SCRWRF are presented in Table ES-1. The new water reclamation facility treatment plant includes the following:

- Fine screening
- Chemical addition (ferric) prior to grit removal
- Primary clarification
- Step-feed nitrification/denitrification
- Chemical addition (ferric) prior to membrane filtration
- Chlorine disinfection
- Gravity belt thickening for primary and waste activated sludge
- Anaerobic digestion
- Aerobic digestion/solid storage
- Centrifuge dewatering

Projected effluent performance was also updated to reflect the selected treatment processes and design criteria. The treatment plant mass balance and design criteria are based on the DBO contractor's 100 percent design drawings.

Table ES-1. Projected Effluent Performance Requirements for the Spokane County Regional Water Reclamation Facility

EFFLUENT LIMITATIONS (March – Oct) [a]		
Parameter	**Seasonal Average**	**Daily Maximum**
Carbonaceous Biochemical Oxygen Demand – 5 day ($CBOD_5$)[a] March 1 to Oct. 31	133.4 lbs/day[b]	
Total Phosphorus (as P) March 1 to Oct. 31[c]	3.34lbs/day[b]	

Total Ammonia (as NH_3-N)[d]		
March 1 to March 31	see footnote[b]	see footnote[d]
For "season" of April 1 to May 31	66.7 lbs/day	16 mg/L
For "season" of June 1 to Sept. 30[e]	16.7 lbs/day	7.5 mg/L
For "season" of Oct. 1 to Oct. 31	66.7 lbs/day	16 mg/L
EFFLUENT LIMITATIONS		
Parameter	**Average Monthly**	**Average Weekly**
Carbonaceous Biochemical Oxygen Demand – 5 day ($CBOD_5$) Nov. 1 thru Feb.	25 mg/L, 1668 lbs/day	45 mg/L, 3002 lbs/day
Total Suspended Solids, mg/L	<30	<45
Fecal Coliform Bacteria	200/100 mL	
pH	Daily minimum is equal to or greater than 6 and the daily maximum is less than or equal to 9	
Parameter	**Average Monthly**	**Maximum Daily**
Total Residual Chlorine		0.010 mg/L, 667 lbs/day
Nitrate Nitrogen, mg/L[f]		
Lead[g]	2 µg/L	3 µg/L
Zinc[g]	60 µg/L	82 µg/L
Cadmium[g]	0.2 µg/L	0.3 µg/L

[a]The Final TMDL includes as wasteload allocation for CBOD, ammonia nitrogen, and total phosphorus. Future discharge permit revisions are expected to include performance based limits. The Managed Implementation Plan (MIP) calls for NPDES limits based on seasonal average values and CBOD limits will be calculated on an average seasonal basis from March through October.

[b]The TMDL wasteload allocation for Spokane County for CBOD is 280.4 lb/d based on an effluent concentration of 4.2 mg/l. At effluent CBOD performance of 2 mg/l under the DBO performance contract, the SCRWRF loading is 133.4 lb/d which off-sets TMDL season effluent phosphorus of 0.050 mg/l (3.34 lbs/d) and March ammonia nitrogen discharge limited by the Maximum Day concentration of 16 mg/l.

[c]The Managed Implementation Plan (MIP) calls for NPDES limits based on seasonal average values. SCRWRF effluent mass loading limits for March-October are based on seasonal average effluent total phosphorus performance of 0.050 mg/L. SCRWRF effluent CBOD at 2 mg/l is lower than the Final TMDL wasteload allocation for Spokane County based on 4.2 mg/l and allows effluent phosphorus loadings based on 0.050 mg/l compared to the wasteload allocation target of 0.042 mg/l to meet the Final TMDL water quality requirements. The MIP projected flow for Spokane County for 2017 is 8 mgd and for 2027 is 8 mgd. Compliance in meeting the pounds of phosphorus target will be achieved by a combination of treatment technology and Delta Elimination. Other Delta Elimination phosphorus reduction actions that together result in same water quality conditions as required in the Final TMDL will be implemented as necessary, for example to offset initial plant performance during the 2 year optimization period provided for in the TMDL.

[d]The Managed Implementation Plan (MIP) calls for NPDES limits based on seasonal average values and ammonia limits will be calculated based on the following: March/April/May (92 day average), June/July/August/September (122 day average), and October (31 day average). The maximum March effluent ammonia concentrations is based on the DBO guarantee (16 mg/L). The DBO concentration was established from previous modeling efforts that incorporated ambient river temperature and pH with expected effluent temperature and pH.

[e] The daily limits for ammonia are based on effluent mixing zone toxicity control, unless superseded by dissolved oxygen limitations at compliance locations in the Spokane River upstream of Lake Spokane.

[f]The County has elected to reduce effluent nitrate-nitrogen levels during the summer permit season to a concentration of 10 mg/L or less.

[g]Performance based limits are required by the metals TMDL. Estimated values are based on the RPWRF permit.

Actual values for the SCRWRF must be established by monitoring effluent metals concentrations.

Recommended Plan

The plan presented in Chapter 9 of the *2006 Wastewater Facilities Plan Amendment* provides a flexible, long-term management strategy for Spokane County, while identifying a phased implementation program to meet capacity and treatment requirements into the future. The only updates to the recommended plan presented in this 2010 Amendment reflect the selected treatment process, described above, the expected plant performance, and updated costs based on the DBO contract. Also, references to the biosolids management strategy and the reclaimed water report were updated to reflect the current plant details. The County has finalized the *Spokane County Reclaimed Water Study* (June 2009) and has completed a draft of the *Spokane County Aquifer Recharge Analysis*. The reclaimed water uses discussed in each of the previous reports will satisfy the "target pursuit action" available to the County.

Phosphorus Management Plan

Several activities have been on-going since the completion of the *2006 Wastewater Facilities Plan Amendment.* The Phosphorus Management Plan presented in this 2010 Amendment has been updated to include the following changes:

- Seasonal phosphorus average concentration from the *Final TMDL* is 0.042 mg/L (March-October) with a wasteload allocation of 2.80 lb/day. The *Final TMDL* acknowledges that the current proven treatment technologies have limited reliability to consistently achieve 0.042 mg/L effluent phosphorus. Because of this, the County has been authorized by the Final TMDL to develop a "delta elimination plan" to identify target pursuit actions to bridge the gap between the 0.042 mg/L target and what treatment technology can achieve.
- The University of Washington is working on a bioassay study to identify the fraction of bioavailable phosphorus in total phosphorus. This data could provide a future "delta elimination" for the County if they can quantify the amount of bioavailable phosphorus in their effluent. The preliminary results show that 99.9 percent of the bioavailable phosphorus is removed from the advanced phosphorus removal pilot facilities.
- A section was added to the phosphorus management plan to further define the potential for treatment technology advances.

Environmental Assessment

A Final Environmental Impact Statement (EIS) for the Draft Wastewater Facilities Plan was issued in February 2002. The purpose of this EIS was to analyze alternate methods for expanding wastewater treatment capacity while continuing the septic tank elimination program. Other analyses included demand management, reclaimed water use, and biosolids management. Following this programmatic EIS, the County chose to construct a new

wastewater treatment facility. In December 2002 a Supplemental EIS (SEIS) was issued by Spokane County to analyze two different potential locations for the facility.

A draft total maximum daily load (Draft TMDL) was issued in October 2004 which was followed by the *Foundational Concepts for the Spokane River TMDL Managed Implementation Plan (Foundational Concepts)*. This document focused on more stringent waste load allocations compared to the 2002 SEIS. Following the Draft TMDL and the *Foundational Concepts*, Spokane County prepared a wastewater facilities plan amendment (*2006 Wastewater Facilities Plan Amendment)* that evaluated advanced treatment processes to achieve very high levels of phosphorous removal. A SEPA addendum was prepared to evaluate the modifications proposed in the *2006 Wastewater Facilities Plan Amendment.*

Following the publication of the *Final TMDL* in 2010, the County is issuing this amendment to the *2006 Wastewater Facilities Plan Amendment.* Previous SEPA analyses were based on SCRWRF operating in compliance with federal and state water quality requirements. These revisions to the *2006 Wastewater Facilities Plan Amendment* are in direct response to the *Final* TMDL and therefore no further SEPA analysis is required.

STATE OF WASHINGTON
DEPARTMENT OF ECOLOGY
PO Box 47600 • Olympia, WA 98504-7600 • 360-407-6000
711 for Washington Relay Service • Persons with a speech disability can call 877-833-6341

December 19, 2008

The Honorable Bonnie Mager, Chair
Spokane County
Board of County Commissioners
1116 West Broadway Avenue
Spokane, WA 99260

Re: **Memorandum of Agreement (MOA) and Amendment No. 1**
Spokane Regional Wastewater Treatment Plant Project
Washington State Water Pollution Control Revolving Fund
Loan No. L0500006

Dear Commissioner Mager:

I am pleased to inform you that the MOA and Amendment No. 1 for the Spokane Regional Wastewater Treatment Plant Project (Project) has been signed. Signed originals are enclosed for your project files and future reference.

Amendment No. 1 provides $8,500,000 toward the project. The MOA establishes Ecology's commitment to place the County on future Washington State Water Pollution Control Revolving Fund (Revolving Fund) annual funding lists to cover eligible costs up to $64,900,000.

The MOA or Amendment No. 1 does not guarantee that subsequent funding agreements will be signed by Ecology. As stated in the MOA, Ecology and the County must enter into new annual funding agreements for each annual funding installment, and those funding installments are subject to legislative appropriation and Water Quality Program rules for the Revolving Fund as specified in paragraph two of the MOA.

Pursuant to WAC 173-98-010, projects that receive Revolving Fund money must be consistent with the federal Clean Water Act. The Environmental Protection Agency ("EPA") has promulgated regulations to implement the Clean Water Act, and under those regulations Ecology cannot issue a National Pollutant Discharge Elimination System ("NPDES") permit for the Project if operation of the Project will cause or contribute to the violation of water quality standards or if the Project is not consistent with the requirements of a total maximum daily load ("TMDL") 40 CFR § 122.4(i).

As a result of recent decisions by the EPA, Ecology will need to issue a new TMDL for the Spokane River. The new TMDL will include conditions that may impact the Project. At this point, neither Ecology nor the County know what requirements will be applicable to the Project

as a result of the new TMDL. Consequently, the County is accepting the risk that the Project will meet TMDL requirements and that Ecology will be able to issue an NPDES permit for the Project.

Consistent with applicable state and federal laws and regulations, Ecology will not sign funding agreements for the Project unless the Project is consistent with the requirements of the new TMDL for the Spokane River. In addition, pursuant to WAC 173-98-600(3)(e), Ecology will not sign funding agreements until the County's conditionally approved facilities plan for the Project receives final approval. As explained in our conditional approval letter, final approval of the facilities plan will require EPA's approval of the new TMDL for the Spokane River.

Any costs incurred or work performed on the project that are not consistent with the NPDES and TMDL requirements and are not clearly stated in a funding agreement signed by Ecology are at the sole risk of the County.

We appreciate this opportunity to assist you with financial and technical assistance and respect the County's decision to move forward with the Project. Ecology would like to extend special thanks to the Spokane County Utilities Director, Bruce Rawls, for his collaborative efforts and diligence in managing this challenging project.

If you have any questions or need additional information, please call Richard Koch, Ecology's Project Engineer, at 509-329-3519 or Cindy Price, Ecology's Financial Manager, at 360-407-7132.

Sincerely,

Polly Zehm

Polly Zehm
Deputy Director

PZ:cp:jb:mb
Enclosure

cc: Bruce Rawls, Spokane County
Jim Bellatty, Ecology
Steve Carley, Ecology
Kelly Susewind, Ecology
Cindy Price, Ecology
Richard Koch, Ecology

MEMORANDUM OF AGREEMENT (MOA)
BETWEEN THE
STATE OF WASHINGTON
DEPARTMENT OF ECOLOGY (DEPARTMENT)
AND
SPOKANE COUNTY (COUNTY)
FOR
COMMITMENT AND TERMS OF FUTURE FUNDING
FOR
THE SPOKANE COUNTY REGIONAL WATER RECLAMATION FACILITY
(PROJECT)

Purpose: This MOA is factually related to Amendment No. 1 to the Washington State Water Pollution Control Revolving Fund (Revolving Fund) Loan Agreement No. L0500006 but is separate from that document. Circumstances unforeseen to both the DEPARTMENT and the County necessitated this MOA and Amendment No. 1.

This MOA affirms the DEPARTMENT's commitment to place the County's' PROJECT on the future annual funding lists for the Revolving Fund for four (4) consecutive years to provide equal loan installments that total a maximum of $64,900,000.00, subject to legislative appropriation of these funds and the DEPARTMENT's applicable Water Quality Program rules for the Revolving Fund.

The County will use the Design-Build-Operate method as authorized by Chapter 70.150 RCW to complete the PROJECT.

For purposes of this MOA, the PROJECT to be funded is the Spokane County Regional Water Reclamation Facility, with a rated average annual capacity of eight (8) million gallons per day. The scope of the PROJECT includes; (1) Project Administration, (2) Construction Management (by and on behalf of the County), (3) Design of the facility (4) Construction of the facility (5) Equipment and materials necessary to construct the facility, (5) Startup commissioning of the facility, and (6) Performance testing.

It is mutually agreed that:

1. The County's existing loan, L0500006 (signed on August 16, 2004), will be reduced from $73,400,000.00 to $8,500,000.00 through a formal amendment, and the scope of work will be amended to include facilities planning updates, pre-design, and equipment that will ultimately be used to complete the PROJECT.
2. The $8,500,000.00 loan, L0500006, will remain at the interest rate of 1.5 percent.
3. The DEPARTMENT makes no commitment for funding of the PROJECT costs that exceed the agreed upon equal, annual installments mentioned in paragraph 10 of this MOA.
4. The interest rate of 1.5 percent for any amount greater than $8,500,000.00 mentioned anywhere in Loan Agreement No. L0500006 is null and void.

5. Any mention of the loan commitment to the COUNTY for $73,400,000.00 at the interest rate of 1.5 percent found in the DEPARTMENT's Intended Use Plan (IUP) (Ecology Publication No 03-10-070) is null and void. Eight and one half million dollars (a portion of the $73,400,000.00) remains at the interest rate of 1.5 percent as mentioned in paragraph 2 of this MOA.
6. The DEPARTMENT will place the County on the DEPARTMENT's IUP for the Revolving Fund for four consecutive years beginning with SFY 2010 and ending in State Fiscal Year 2013. The County will not be required to submit a separate loan application for the Revolving Fund amounts specified in paragraph 10 of this MOA.
7. All funding will be subject to legislative appropriations and annual Water Quality Program Funding Program funding ceiling levels for the Revolving Fund, which are cited in Chapter 173-98 WAC. If there is insufficient legislative appropriation, or if the funding ceiling level during SFY2010-SFY 2013 reduces the payments, as defined in paragraph 10, the DEPARTMENT agrees to add the COUNTY PROJECT into the IUP for SFY 2014 and SFY2015 to make up the shortfall in funding if legislative appropriations and funding ceiling levels do not restrict funding to the PROJECT during SFY 2014 and 2015.
8. The equal annual installments will be offered at an interest rate of 60 percent of tax exempt municipal bonds, in accordance with Chapter 173-98 WAC. This interest rate will be identified in the IUP for each state annual funding cycle in which the loan is made.
9. The DEPARTMENT may apply a weighted-average-interest rate to include the entire loan installments mentioned in paragraph 10 of this MOA at the end of the PROJECT.
10. The equal installments that will be placed on the DEPARTMENT's IUP are as follows:

    - SFY 2010: $16,225,000
    - SFY 2011: $16,225,000
    - SFY 2012: $16,225,000
    - SFY 2013: $16,225,000
    - Total: $64,900,000

11. Repayment of the entire loan installments mentioned in paragraph 10 of this MOA will be based on the actual Initiation of Operation Date of the project or one year after the final installment mentioned in paragraph 10, whichever occurs first.
12. The DEPARTMENT makes no commitment for funding eligible project costs that exceed the installments mentioned in paragraph 10 of this MOA.
13. The COUNTY may apply for additional funding during the state annual competitive funding cycle for the Revolving Fund.
14. Annual installments for the Revolving Fund SFY 2010-2013 are not guaranteed until a formal loan funding agreement is signed for the applicable year by the DEPARTMENT's authorized signatory.
15. The DEPARTMENT and COUNTY will sign new funding agreements for each loan installment in SFY 2010-2013.

16. The DEPARTMENT reserves the right to terminate or modify its commitment to keep the COUNTY eligible for Water Pollution Control Revolving Fund for SFY 2010-2013 for the PROJECT if the COUNTY experiences delays that prevent it from completing the PROJECT by the end of SFY2013.

The Parties sign this MOA:

8 0978

STATE OF WASHINGTON
DEPARTMENT OF ECOLOGY

Polly Zehm 12/19/08
Polly Zehm Date
Deputy Director
Washington State Department of Ecology

APPROVED AS TO FORM ONLY:
ASSISTANT ATTORNEY GENERAL

SPOKANE COUNTY

Bonnie Mager 12/22/08
Bonnie Mager, Chair Date

Todd Mielke, Vice-Chair

Mark Richard, Commissioner

ATTEST:

Daniela Erickson
Daniela Erickson
Clerk of the Board

No. 8 0978

7c

BEFORE THE BOARD OF COUNTY COMMISSIONERS OF
SPOKANE COUNTY, WASHINGTON

IN THE MATTER OF AUTHORIZING THE EXECUTION OF AN AMENDMENT TO THE WASHINGTON STATE WATER POLLUTION CONTROL REVOLVING FUND LOAN AGREEMENT NO. L0500006, AND A MEMORANDUM OF AGREEMENT FOR COMMITMENT AND TERMS OF FUTURE FUNDING	)	**RESOLUTION**

WHEREAS, pursuant to the provisions of the Revised Code of Washington (RCW) Section 36.32.120(6), the Board of County Commissioners of Spokane County, Washington (hereinafter "the Board"), has the responsibility for the care of County property and the management of County funds and business; and

WHEREAS, pursuant to the provisions of RCW Chapter 36.94, the Board has the authority to construct, operate and maintain a system of sewerage within the unincorporated areas of Spokane County and provide funds therefor; and

WHEREAS, pursuant to the provisions of RCW Chapter 90.50A, the Washington State Department of Ecology administers a Water Pollution Control Revolving Fund (RF) to provide financial assistance to applicants throughout the State who need assistance to meet high priority water quality management needs; and

WHEREAS, pursuant to the provisions of RCW Chapter 90.50A, such funds may be used to finance water pollution control facilities; and

WHEREAS, the Department of Ecology adopted a pilot rule amending WAC 173-98-060 allowing the use of RF Loan funds for Design-Build-Operate as a delivery method for wastewater treatment plants; and

WHEREAS, Spokane County applied for, and was offered RF Loan funding by the Department of Ecology in a letter dated August 15, 2003; and

WHEREAS, The Board executed RF Loan Agreement No. L0500006 on August 16, 2004, for $73,400,000, including $8,500,000 for Fiscal Year 2004; and

WHEREAS, the project has been extensively delayed by the Spokane River Dissolved Oxygen Total Maximum Daily Load; and

WHEREAS, the project expenditures are projected to total approximately $8,500,000 by the termination date of the loan, August 16, 2009; and

WHEREAS, the Washington State Department of Ecology has drafted an Amendment to RF Loan No L0500006 to reduce the original loan amount to $8,500,000, and a separate

Memorandum of Agreement to provide $64,900,000 funding for the remaining loan amount in Fiscal Years 2010-2013, under separate future loan agreements; and

WHEREAS, N. Bruce Rawls, Director of the Utilities Division, has recommended that the Chair of the Board of County Commissioners, or a majority of the Board of County Commissioners, be authorized to execute the following documents: (1) "Amendment No. 1 to Loan Agreement No. L0500006 Between the State of Washington Department of Ecology and Spokane County", which is attached hereto and labeled as Exhibit A; and (2) the "Memorandum of Agreement Between the State of Washington Department of Ecology and Spokane County for Commitment and Terms of Future Funding for The Spokane County Regional Water Reclamation Facility", which is attached hereto and labeled as Exhibit B.

NOW, THEREFORE, BE IT HEREBY RESOLVED by the Board of County Commissioners of Spokane County that either the Chair or a majority of the Board of County Commissioners be and is hereby authorized to execute that document titled "Amendment No. 1 to Loan Agreement No. L0500006 Between the State of Washington Department of Ecology and Spokane County", which is attached hereto and labeled as Exhibit A; and

BE IT FURTHER RESOLVED by the Board of County Commissioners of Spokane County that either the Chair or a majority of the Board of County Commissioners be and is hereby authorized to execute that document titled "Memorandum of Agreement Between the State of Washington Department of Ecology and Spokane County for Commitment and Terms of Future Funding for the Spokane County Regional Water Reclamation Facility", attached hereto and labeled as Exhibit B; and

BE IT FURTHER RESOLVED by the Board of County Commissioners of Spokane County that the receipt of a Washington State Water Pollution Control Revolving Fund Loan, is a procedural matter, having no substantive effect on the quality of the environment, and accordingly, pursuant to WAC 197-11-800(20), is exempt from the State Environmental Policy Act.

ADOPTED by the Board of County Commissioners of Spokane County, Washington, this 28th day of October 2008.

BOARD OF COMMISSIONERS SPOKANE COUNTY SEAL SPOKANE COUNTY, WA

Bonnie Mager, Chair

Todd Mielke, Vice-Chair

ATTEST:

By: Daniela Erickson

Daniela Erickson, Clerk of the Board

Mark Richard, Commissioner

A2.1 BASIS OF PLANNING REPORT

The *2006 Wastewater Facilities Plan Amendment* included a summary of the updated *Final Basis of Planning Report*. Assumptions and data in the *2006 Wastewater Facilities Plan Amendment* were reviewed and updated where appropriate. The goals, objectives, and planning elements for each of the previous Facilities Plans have been similar. This 2010 Amendment to the *2006 Wastewater Facilities Plan Amendment* aligns with the previously established goals, including:

- Provide reliable wastewater service–both near- (20-years) and long-term (50-years)
- Protect public health
- Protect and improve the region's water resources – surface water and groundwater
- Provide cost-effective solutions for County ratepayers
- Provide for growth in concurrence with the Growth Management Act
- Ensure the County has the authority and control to meet future wastewater needs
- Gain approval by the public, elected officials and regulatory agencies

Changes to Chapter 2 - Basis of Planning Summary as a result of the February 2010 *Spokane River and Lake Spokane Dissolved Oxygen Total Maximum Daily Load Water Quality Improvement Report* (*Final TMDL)* are as follows:

- Wasteload allocation and effluent phosphorus concentration values were changed throughout to reflect the 0.042 mg/L seasonal average target concentration
- Preliminary results of a water quality assessment have been presented. The modeling effort compared the TMDL limits with two alternative permit limits for Spokane County to quantify the effect on dissolved oxygen in the Spokane River and Lake Spokane
- Table A2-7 and Table A2-8 were updated to reflect the *Final TMDL* and a new table was added comparing the City of Spokane Draft NPDES Permit, the February 2010 TMDL information for Spokane County, and the DBO Performance Guarantee
- Spokane River TMDL Managed Implementation Plan section was updated
- Potential Spokane River effluent discharge requirements were updated to reflect the final discharge requirements per the *Final TMDL*
- Effluent Reuse section was updated based on the *Spokane County Reclaimed Water Use Study (June 2009)*

A2.5 WATER QUALITY AND WATER RESOURCE ISSUES

Chapter 4 of the Final Basis of Planning Report reviews the characteristics of key water resources that may be impacted by the County's wastewater management program – the Spokane Valley-Rathdrum Prairie Aquifer, the Spokane River, and Little Spokane River.

These water bodies comprise the major components of a large, hydraulically-interconnected water system in the Spokane region. As such, actions affecting one of the resources may have direct or indirect impacts on the other resources as well. Water quality issues and other factors that will shape quality requirements for discharge of effluent to receiving waters, beneficial reuse of effluent and beneficial reuse of biosolids are discussed in this section.

2.5.3 Dissolved Oxygen Total Maximum Daily Load (TMDL)

During the summer months, segments of the Spokane River and Lake Spokane exhibit low dissolved oxygen levels, and fail to meet Washington State water quality standards for dissolved oxygen. Phosphorus is understood to be the constituent that has the greatest effect on surface water dissolved oxygen levels and is the treatment focus for Spokane County. Other constituents of concern with regard to dissolved oxygen are ammonia-nitrogen and carbonaceous biochemical oxygen demand (CBOD). In response to the decreased water quality in Lake Spokane, Ecology initiated a TMDL process to assess water quality problems, define the sources of pollutants that cause the problems and determine the amounts of pollutants that can be discharged to the river while meeting water quality standards.

The Washington State Department of Ecology published a *Draft Total Maximum Daily Load to Restore and Maintain Dissolved Oxygen in the Spokane River and Lake Spokane (Draft DO TMDL)* in October 2004 and the *Foundational Concepts for the Spokane River TMDL Managed Implementation Plan (2006).* The recently released *Spokane River and Lake Spokane Dissolved Oxygen TMDL Water Quality Improvement Report (Final TMDL)* describes the wasteload allocations for Washington Dischargers to the Spokane River. The wasteload allocation for Spokane County is located in Table 5 of the *Final TMDL*. This document also identifies target pursuit actions for a Spokane County facility to discharge to the Spokane River. The goal of the TMDL is to "prevent low dissolved oxygen, excessive algae blooms, and degradation of downstream water quality" (*Final TMDL*, 2010).

Ecology defined seasonal limitations for total phosphorus, ammonia-nitrogen, and CBOD. The critical period for phosphorus is defined as March 1 to October 31, during which Spokane County must discharge an average phosphorus concentration less than 0.042 mg/L. The seasonal limits for ammonia-nitrogen are between 0.21 and 0.83 mg/ L for March - September. The target effluent limit for CBOD during the permit season is 4.2 mg/L. A summary of the *Final TMDL* wasteload allocations can be found in Table A2-7.

2.5.4 Foundational Concepts for the Spokane River TMDL Managed Implementation Plan

The *Foundational Concepts* document was an appendix of the *2006 Wastewater Facilities Plan Amendment* and also used as a guiding document for the *Final TMDL.* The *Foundational Concepts* provided potential wasteload allocations and effluent phosphorus requirements for Spokane River dischargers under a previous draft version of the TMDL. The *Foundational Concepts* document is an aggressive, managed approach that removes phosphorous from a variety of sources through various methods and monitors and assesses the impacts of dissolved oxygen over the next 20 years in a reasonable way to maximize the effectiveness of the investments in actions taken to improve the Spokane River. The difference between what wastewater treatment technologies can achieve and the wasteload

allocation target is referred to as the "Delta". The *Foundational Concepts* document has been included as a part of the *Final TMDL* and designates the difference between what wastewater treatment technologies can achieve and the wasteload allocation target as the "Delta" to be achieved through the use of offsets. The *Foundational Concepts* document calls for a thorough reassessment of the TMDL after the 10th year of the Managed Implementation Plan (MIP) and anticipates that the second 10 years of the plan could include new actions, such as consideration of river oxygenation and/or reconsideration of water quality standards.

Waste Load Allocation Targets

The *Final TMDL* document presents a wasteload allocation for point source dischargers and is summarized in Table A2-7. Dischargers are to develop a combination of the most effective feasible phosphorus removal treatment technology and implementation of other phosphorus reduction efforts that together result in meeting the wasteload allocation. The County's new plant must achieve compliance with the TMDL phosphorous target through its wastewater treatment technology and offset actions at the time the plant begins normal, routine operations (*Final TMDL*, p. 62)

Table A2-7. Wasteload Allocation Table from Spokane River and Lake Spokane Dissolved Oxygen Water Quality Improvement Report (2010)

Point Source Discharge	2027 Projected Flow Rates (MGD)[1]	NH3-N		TP		$CBOD_5$[2]	
		mg/L	lbs/day (WLA)	mg/L	lbs/day (WLA)	mg/L	lbs/day (WLA)
Liberty Lake	1.5	variable[3]	variable[3]	0.036	0.45	3.6	45.1
Kaiser	15.4	0.07	9.0	0.025	3.21	3.6	462.7
Inland Empire Paper Company	4.1	0.71	24.29	0.036	1.23	3.6	123.2
City of Spokane	50.8	variable[3]	variable[3]	0.042	17.81	4.2	1780.6
Spokane County (new plant)	8	variable[3]	variable[3]	0.042	2.80	4.2	280.4
Stormwater[5]	2.36	0.05	0.98	0.310	6.1	3.0	59.1
CSO	0.12	1.0	1.0	0.95	0.95	30.0	30.0

1. Actual, not projected flows, will determine compliance with wasteload allocations in NPDES permits.
2. NPDES permit limits will use $COBD_5$ (as shown) rather than $CBOD_{ult}$
3. Ammonia wasteload allocations for these facilities very depending on the season based on the following effluent concentrations:
City of Spokane and Spokane County:
March to May, October: 0.83 mg/L
June to September: 0.21 mg/L
4. Wasteload allocations for Kaiser are lower than other dischargers due to non-contact groundwater, which is low in nutrients, comprising a significant portion of that facility's discharge.
5. Stormwater wasteload allocation is for Washington sources only and is based on average existing flows, not 2027 projected flows.

New Spokane County Treatment Plant

The *Foundational Concepts* document identifies the following requirements for a new Spokane County treatment plant discharge to the Spokane River:

- County will submit to Ecology for approval, the County's engineering report for the plant to show how the most effective, feasible phosphorus removal technology has been selected, and how the offsets will be timely developed.
- At the time the plant begins normal, routine operations, it is expected the combination of offset actions and the plant's treatment of water to be discharged in the River will together achieve compliance with a seasonal average 0.042 mg/L total phosphorus target from the TMDL, which was 0.01 mg/L and has now been established in the final TMDL as 0.042 mg/L for Spokane County.
- Consistent with NPDES requirements, the plant will be permitted by Ecology in order to enable rapid conversion of septic systems to sewers consistent with the approved septic tank elimination program prior to the completion of the County plant.
- The County will construct the plant within the first 6 years of the MIP as the County's offsets from the target pursuit actions are being developed and made operative.
- It is recognized that any phosphorus reduction actions selected by the County that rely on the plant achieving normal, routine operation for their full implementation (such as septic tank elimination and water reuse) can still contribute to the County's offsets.
- It is further recognized that, because modern phosphorus removal technology is challenging, achieving normal and routine operation may require two years, assuming average seasonal conditions (temperature and flow) during both years. During this period, Ecology will recognize these conditions and their effects on compliance with interim discharge limits.
- The County will also develop a comprehensive program for reclaimed water production, reuse and aquifer recharge of effluent. This reuse program will be subject to the same conditions described for other reuse target pursuit action plans.

2.5.5 Potential Spokane River Effluent Discharge Requirements

Effluent quality requirements for the Spokane County Regional Water Reclamation Facility (SCRWRF) will be based on the dissolved oxygen TMDL prepared by the Department of Ecology. The February 2010 *Final TMDL* identifies the effluent phosphorus requirements for the SCRWRF to discharge to the Spokane River with a combination of treatment technology and other offset actions to achieve compliance with the Final TMDL. The requirements for the National Pollutant Discharge Elimination System (NPDES) permit for effluent discharge will be based on the *Final TMDL*.

As the TMDL progressed from the original draft in 2004, lower ammonia limits were included in the wasteload allocation and the water quality season was extended earlier in the year to include the month of March. Spring season ammonia control is recognized as being especially challenging due to cooler wastewater temperatures which significantly reduces nitrification reaction rates. Adding ammonia control requirements as low as 1 mg/L or less in March would have an influence on the size of treatment facilities and result in unnecessary

over-sizing of the activated sludge reactors to compensate for cooler wastewater temperatures, without providing any additional protection of water quality.

For these reasons, Spokane County undertook a water quality modeling analysis to examine the potential impacts that different levels of ammonia nitrogen concentrations in March would have on Lake Spokane water quality. This water quality modeling analysis compared the TMDL scenario with alternative ammonia and CBOD effluent levels from the SCRWRF. Table A2-10 presents a comparison between the draft NPDES permit requirements for the City of Spokane's Riverside Park Water Reclamation Facility, the final TMDL wasteload allocation, and the DBO performance requirements for the SCRWRF. The DBO performance requirements include a November through March requirement limiting Maximum Daily effluent Ammonia to 16 mg/L. Water quality modeling analysis was conducted to compare alternative effluent ammonia limits for March of 1 mg/L and 16 mg/L, along with a lower CBOD effluent requirement of 2 mg/L (which is much lower than the final TMDL wasteload allocation), with the final TMDL scenario.

Table A2-10. Comparison of the City of Spokane NPDES Permit, the 2010 Lake Spokane TMDL, and the DBO Performance Guarantee

Parameter	Draft City of Spokane NPDES Permit for Riverside Park Facility		*Equivalent Concentration Used in Mass Calculation from Revised February 2010 TMDL Table 5 Wasteload Allocation*	DBO Performance Guarantee Appendix 10	
	Average Monthly	Daily Maximum		Table 10-1 Summer Season	
	March – October Effluent Limitations			Monthly Average	Maximum Daily
				April 1 to Oct 31	
CBOD	1,778 lbs/d	-	*4.2 mg/L*	-	2 mg/L
TP	17.8 lbs/d	-	*0.042 mg/L*		
TP, Seasonal Average		-		0.050 mg/L	-
Ammonia-N Mar – May, Oct	351 lbs/d	-	*0.83 mg/L*		
Ammonia N Apr, May, Oct				1 mg/l	16 mg/L
Ammonia-N Jun - Sept	89 lbs/d	7.5 mg/L	*0.21 mg/L*		
Ammonia N Jun - Sept				0.25 mg/L	8 mg/L
	November – February Effluent Limitations		*No Limits for Nov – Feb in Revised February 2010 TMDL Table 5 Wasteload Allocation*	Table 10-2 Winter Season	
				Nov 1 to Mar 31	
	Average Monthly	Average Weekly		Monthly Average	Maximum Daily
CBOD	30 mg/L	45 mg/L	-	-	2 mg/L
TP	-	-	-	-	-
Ammonia N Nov - Mar	-	-	-	-	16 mg/L

Water Quality Modeling Assessment of Alternate Spokane County Effluent Limits

Recent water quality modeling of the Spokane River using CE-QUAL-W2 conducted by LimnoTech for Spokane County investigated alternative SCRWRF ammonia discharges in March. The purpose of the modeling effort was to test ammonia sensitivity based on season and interaction with effluent CBOD. The results of the model indicated that higher ammonia limits paired with lower CBOD limits will achieve the same dissolved oxygen concentrations in the Spokane River and Lake Spokane as what is presented in the TMDL. Further, this analysis illustrates that the lower SCRWRF effluent CBOD coupled with a seasonal average effluent phosphorus at 0.050 mg/l meets the requirements of the *Final TMDL*.

Three different scenarios were considered for this water quality modeling analysis, one that represented the TMDL, with March effluent ammonia of 0.83 mg/L, and two alternatives. Alternative No. 1 applied varying ammonia levels (March – 16 mg/L, April to May – 1 mg/L, June to September – 0.25 mg/L), a year-round CBOD concentration of 2.0 mg/L, and a seasonal (March to October) total phosphorus concentration of 0.050 mg/L. Alternative No. 2 applied varying ammonia levels (March to May – 1 mg/L, June to September – 0.25 mg/L), a year-round CBOD concentration of 2.0 mg/L, and a seasonal (March to October) average total phosphorus concentration of 0.050 mg/L. The modeling effort was used to determine the effect of significantly lower ammonia limits in March on the dissolved oxygen concentration in the Spokane River and Lake Spokane and to quantify the relationship between decreased CBOD concentrations and increased ammonia concentrations.

The model was run based on areas of greatest significance as determined by TMDL scenarios (model segments 34 to 36) especially for the month of August. The model results showed that the dissolved oxygen impact for the critical segments and time were minimal. For Alternative No. 1 a dissolved oxygen increase was observed between 0.0099 and 0.012 mg/L. For Alternative No. 2 a dissolved oxygen increase was observed between 0.013 and 0.014 mg/L. These model results predict that increasing the ammonia limit in March to 16 mg/L, while decreasing the CBOD limit, will improve the water quality in the Spokane River and Lake Spokane.

The technical memorandum documenting the modeling analysis is included as an Appendix to this chapter and the modeling results are summarized in Table 2 of the March 10, 2010 Limnotech Memorandum (See Appendix – Section A2.9). The results show a water quality improvement over the TMDL scenario for dissolved oxygen concentrations in the Spokane River. The key factor that contributes to the improved water quality is the balance between CBOD and ammonia concentrations. Spokane County's effluent CBOD requirement as modeled is 2 mg/L, as compared to the 4.2 mg/L in the TMDL wasteload allocation. The lower CBOD partially offsets the increased ammonia discharge in March. The results from the CE-QUAL-W2 modeling of alternatives were post processed in the same manner as used in the TMDL for assessment of the impact on dissolved oxygen depression in Lake Spokane.

Since the SCRWRF membrane bioreactor (MBR) treatment process is capable of producing low effluent phosphorus concentrations (0.050 mg/l), as well as effluent CBOD at levels lower (2 mg/l) than called for in the TMDL wasteload allocation (4.2 mg/L) throughout the entire calendar year, the water quality modeling indicates that the SCRWRF discharge will meet the *Final TMDL* requirements for dissolved oxygen in Lake Spokane.

Proposed Spokane County Effluent Limits

Based on water quality analyses conducted to date, Spokane County requests that the Department of Ecology use the effluent quality limits listed in Table A2-8 be in the initial NPDES permit.

Proposed effluent discharge permit limits in Table A2-8 are based on the following:

- Compliance with the effluent phosphorus limits should be determined on a seasonal average basis in recognition of variability in treatment performance when achieving very low effluent phosphorus concentrations in accordance with the *Spokane County and Lake Spokane Dissolved Oxygen TMDL Water Quality Improvement Report* (February 2010).
- Lower SCRWRF effluent CBOD coupled with a seasonal average effluent phosphorus at 0.050 mg/l meets the requirements of the *Final TMDL*
- Effluent CBOD limits should be determined on a seasonal average basis in recognition of variability in treatment performance when achieving very low effluent concentrations.
- Peak ammonia-nitrogen discharge limits should be specific to the outfall location and based on either preventing reasonable potential for toxicity in the mixing zone or dissolved oxygen impacts in the river.
- Effluent mixing zone analysis was conducted to establish a basis for prevention of ammonia toxicity in the effluent mixing zone, as documented in Appendix D Mixing Zone Study Report (LimnoTech, 2004) of the *2006 Wastewater Facilities Plan Amendment*. At the time of the mixing zone analysis, effluent ammonia concentrations were expected to be 3 mg/L in the summer and 20 mg/L in the winter. Ambient ammonia concentrations in the Spokane River at the 90th-percentile concentration were assumed to be 0.22 mg/L in the summer and 0.3 mg/L in the winter based on the NPDES Fact Sheet for the City of Spokane treatment plant. Ambient Spokane River pH was assumed to be 7.8 in both winter and summer based on EPA STORET and Ecology databases. Spokane River temperatures for the mixing zone analysis were 17.9 ^{0}C in the summer and 8.4 ^{0}C in the winter. The mixing zone analysis concluded that dilution sufficient to attain the acute and chronic water quality criteria in both summer and winter in the Spokane River would be met with a single port outfall diffuser located at mid-channel.
    - Potential effluent limits for peak day ammonia discharges were evaluated in September of 2007 based on CE-QUAL-W2 modeling of the river for dissolved oxygen impacts and effluent mixing zone analysis of the potential for toxicity (LimnoTech, 2007). Allowable peak day discharges from the Spokane County

Regional Water Reclamation Facility are approximately 8 mg/L based on dissolved oxygen in the river during June/July/August/September and approximately 16 mg/L based on potential toxicity. Further consideration of water reclamation facility ammonia discharges to the Spokane River included the potential for peak concentration events to coincide at more than one facility. It was concluded that this was a very remote possibility and it was unnecessary to base peak effluent ammonia discharge limits on river water quality modeling with multiple treatment plants having peak day discharges on the same day (HDR, 2007).

- Ammonia-nitrogen limits driven by the dissolved oxygen TMDL should be determined on a seasonal average basis in recognition of variability in treatment performance when achieving very low effluent concentrations. The water quality modeling analysis using CE-QUAL-W2 demonstrates that the following SCRWR effluent characteristics result in dissolved oxygen concentrations in Lake Spokane that are the same, or better than the TMDL wasteload allocation:

  - Effluent CBOD March – October: 2.0 mg/L
  - Effluent Phosphorus March – October: 0.050 mg/L
  - Effluent Ammonia
    - March: 16 mg/L
    - April and May, October: 1.0 mg/L
    - June – September: 0.25 mg/L

- The start of the summer permit season is determined to be from March 1 through October 31 based on the TMDL prepared by the Department of Ecology (*Final TMDL*, February 2010).
- During the winter permit season, instream dissolved oxygen levels greatly exceed the Class A criterion of 8 mg/L. Consequently, discharge of tertiary effluent would not cause an instream dissolved oxygen violation.
- Dilution studies and a mixing zone analysis indicate that there is not a reasonable potential for arsenic, copper, chromium, mercury, nickel and silver to exceed toxicity criteria. Consequently, numerical limits are not warranted for these constituents. The only metals requiring limits are lead, cadmium and zinc, which are governed by the Spokane River metals TMDL.
- The proposed discharge from the SCRWRF will not cause instream temperature to exceed the water quality standard of 20°C for the Middle Spokane River, and will not result in a temperature increase that exceeds the allowable incremental increases of 2.0^{o}C and 1.3^{o}C for winter and summer, respectively.[1]

[1] Based on equation t = 34/(T + 9), where T = background temperature.

- It is expected that SCRWRF will pursue a treatment process optimization period of up to two years to fine-tune the phosphorus removal system for the best performance possible prior to final discharge permit compliance limits.

In addition to the anticipated limits presented in Table A2-8, the County has elected to reduce effluent nitrate-nitrogen levels during the summer permit season to a concentration of 10 mg/L or less. This measure is designed to minimize nitrate loadings to the Spokane Aquifer resulting from either reuse practices or groundwater recharge of treated effluent discharged to the Spokane River.

The County expects that the proposed membrane technology for the SCRWRF will provide a higher quality effluent than is required to meet the anticipated initial NPDES permit effluent limits. Based on typical membrane bioreactor performance in other locations, it is expected that effluent TSS will generally be less than 5 mg/L and BOD will be less than 5 mg/L year-round.

Table A2-8. Proposed Effluent Quality Limits for SCRWRF Discharge to the Spokane River

EFFLUENT LIMITATIONS (March – Oct) [a]		
Parameter	**Seasonal Average**	**Daily Maximum**
Carbonaceous Biochemical Oxygen Demand – 5 day ($CBOD_5$)[a] March 1 to Oct. 31	133.4 lbs/day[b]	
Total Phosphorus (as P) March 1 to Oct. 31[c]	3.34lbs/day[b]	
Total Ammonia (as NH_3-N)[d]		
March 1 to March 31	see footnote[b]	see footnote[d]
For "season" of April 1 to May 31	66.7 lbs/day	16 mg/L
For "season" of June 1 to Sept. 30[e]	16.7 lbs/day	7.5 mg/L
For "season" of Oct. 1 to Oct. 31	66.7 lbs/day	16 mg/L
EFFLUENT LIMITATIONS		
Parameter	**Average Monthly**	**Average Weekly**
Carbonaceous Biochemical Oxygen Demand – 5 day ($CBOD_5$) Nov. 1 thru Feb.	25 mg/L, 1668 lbs/day	45 mg/L, 3002 lbs/day
Total Suspended Solids, mg/L	<30	<45
Fecal Coliform Bacteria	200/100 mL	
pH	Daily minimum is equal to or greater than 6 and the daily maximum is less than or equal to 9	
Parameter	**Average Monthly**	**Maximum Daily**
Total Residual Chlorine		0.010 mg/L, 667 lbs/day
Nitrate Nitrogen, mg/L[f]		
Lead[g]	2 µg/L	3 µg/L
Zinc[g]	60 µg/L	82 µg/L
Cadmium[g]	0.2 µg/L	0.3 µg/L

[a]The Final TMDL includes as wasteload allocation for CBOD, ammonia nitrogen, and total phosphorus. Future discharge permit revisions are expected to include performance based limits. The Managed Implementation Plan (MIP) calls for NPDES limits based on seasonal average values and CBOD limits will be calculated on an average seasonal basis from March through October.

[b]The TMDL wasteload allocation for Spokane County for CBOD is 280.4 lb/d based on an effluent concentration of 4.2 mg/l. At effluent CBOD performance of 2 mg/l under the DBO performance contract, the SCRWRF loading is 133.4 lb/d which off-sets TMDL season effluent phosphorus of 0.050 mg/l (3.34 lbs/d) and March ammonia nitrogen discharge limited by the Maximum Day concentration of 16 mg/l.

[c]The Managed Implementation Plan (MIP) calls for NPDES limits based on seasonal average values. SCRWRF effluent mass loading limits for March-October are based on seasonal average effluent total phosphorus performance of 0.050 mg/L. SCRWRF effluent CBOD at 2 mg/l is lower than the Final TMDL wasteload allocation for Spokane County based on 4.2 mg/l and allows effluent phosphorus loadings based on 0.050 mg/l compared to the wasteload allocation target of 0.042 mg/l to meet the Final TMDL water quality requirements. The MIP projected flow for Spokane County for 2017 is 8 mgd and for 2027 is 8 mgd. Compliance in meeting the pounds of phosphorus target will be achieved by a combination of treatment technology and Delta Elimination. Other Delta Elimination phosphorus reduction actions that together result in same water quality conditions as required in the Final TMDL will

be implemented as necessary, for example to offset initial plant performance during the 2 year optimization period provided for in the TMDL.
[d]The Managed Implementation Plan (MIP) calls for NPDES limits based on seasonal average values and ammonia limits will be calculated based on the following: March/April/May (92 day average), June/July/August/September (122 day average), and October (31 day average). The maximum March effluent ammonia concentrations is based on the DBO guarantee (16 mg/L). The DBO concentration was established from previous modeling efforts that incorporated ambient river temperature and pH with expected effluent temperature and pH.
[e] The daily limits for ammonia are based on effluent mixing zone toxicity control, unless superseded by dissolved oxygen limitations at compliance locations in the Spokane River upstream of Lake Spokane.
[f]The County has elected to reduce effluent nitrate-nitrogen levels during the summer permit season to a concentration of 10 mg/L or less.
[g]Performance based limits are required by the metals TMDL. Estimated values are based on the RPWRF permit. Actual values for the SCRWRF must be established by monitoring effluent metals concentrations.

A2.7 EFFLUENT REUSE

With appropriate levels of treatment and system management, reclaimed water has been used successfully for many applications. Reclaimed water programs must consider the state's guidance provided in the Water Reclamation and Reuse Standards, which outline four classes of reclaimed water that can be used for different applications. These range from Class A water, which has the most stringent treatment requirements but minimal restrictions on use, to Class D water which has limited uses which must be accompanied by strict controls to minimize human contact. The June 30, 2006 *Foundational Concepts for the Spokane River TMDL Managed Implementation Plan* calls for Spokane County to produce Class A reclaimed water. Class A reclaimed water is suitable for use in urban irrigation, as industrial process water, aquifer recharge, and wetlands restoration. Spokane County published a *Reclaimed Water Use Study* (June 2009) that evaluated several options. The following three options are to be studied further for implementation:

- Aquifer recharge (report has been drafted and reviewed by DOH and Ecology)
- Industrial reuse
- Wetland restoration at Saltese Flats

Further detail on reclaimed water use can be found in Chapter 5 of the *2006 Wastewater Facilities Plan Amendment*, and in the *Reclaimed Water Use Study (June 2009).*

A2.8 BIOSOLIDS MANAGEMENT

Land application, composting and land filling are the biosolids management techniques typically used in Eastern Washington and Northern Idaho. These uses are regulated by Ecology using rules which closely follow those promulgated by the U.S. EPA under 40 CFR 503 ("Part 503 regulations"). These regulations use three measures to determine the level of restriction placed on the application practice: (1) concentration of trace elements; (2) quantity of pathogens; and (3) vector attraction. Two classes of pathogen reduction are recognized, with associated differences in the level of restriction placed on reuse of the treated biosolids.

Washington State includes a requirement for "significant removal of manufactured inerts," from biosolids before land application. The rule specifies that solids must be screened

"through a bar screen with a maximum aperture of 3/8-inch," or inerts must be removed using another method approved by Ecology. Grinding is not an acceptable option.

A2.9 APPENDIX

LimnoTech, Inc., "*Draft Water Quality Assessment of Alternate Spokane County Permit Limits*," March 11, 2010.

A2.10 REFERENCES

LimnoTech, Inc., "*Mixing Zone Study Report for the Proposed Spokane County Discharge to the Spokane River, Washington*," June 21, 2004.

LimnoTech, Inc., Powerpoint Presentation of Spokane River CE-QUAL-W2 Modeling Results to Washington Ecology, September 19, 2007.

HDR Engineering, Inc. "*Potential for Coincident Peak Day Ammonia Discharges*," e-mail correspondence to Spokane County and Washington Ecology, October 12, 2007.

LimnoTech
Water | Environment | Scientists | Engineers

MEMORANDUM

DATE: March 11, 2010

FROM: Dave Dilks

PROJECT: SPOCFP

TO: Dave Clark

CC:

SUBJECT: DRAFT: Water Quality Assessment of Alternate Spokane County Permit Limits

---

Summary

LimnoTech applied the recently updated CE-QUAL-W2 model of the Spokane River system to assess the dissolved oxygen impact of alternate Spokane County permit limits on dissolved oxygen in Long Lake, relative to the TMDL. Model results indicate that the two scenarios being considered by the County both result in a slight improvement in hypolimnetic dissolved oxygen concentrations.

Introduction

Washington Department of Ecology (2010) developed a Total Maximum Daily Load for nutrients and oxygen demanding materials designed to minimize the anthropogenic affects on dissolved oxygen in Long Lake. The TMDL loading scenario assumed that the Spokane County discharge would have summer permit limits for CBOD of 4.2 mg/l; phosphorus of 0.042 mg/l; and ammonia of 0.21 mg/l.

The purpose of this work is to examine alternate permit limits being considered by Spokane County, in order to determine if they result in dissolved oxygen concentrations as protective as those resulting from the TMDL. The memorandum is divided into two sections:

- Scenarios Evaluated
- Model Results

Scenarios Evaluated

Three scenarios were simulated, corresponding to

- TMDL
- Spokane Alternative #1
- Spokane Alternative #2

A description of the specific effluent assumptions associated with each scenario is provided in Table 1.

501 Avis Drive
Ann Arbor, MI 48108
734-332-1200
Fax: 734-332-1212
www.limno.com

Table 1. Scenarios Examined

Scenario	Assumed Spokane County Ammonia	Assumed Spokane County CBOD	Assumed Spokane County TP
TMDL	0.83 mg/L: March – May; October. June - September: 0.21 mg/L	4.2 mg/l: June - September	0.042 mg/l: March – October
Spokane Alt. #1	16 mg/l: March 1 mg/L: April – May; 0.25 mg/L: June - September	2.0 mg/l: Year around	0.050 mg/l: March – October
Spokane Alt. #2	1 mg/L: March – May; 0.25 mg/L: June - September	2.0 mg/l: Year around	0.050 mg/l: March – October

Each scenario simulation consisted of three sequential model runs, as structured by PSU. The first simulation considers the Idaho portion of the Spokane River, the second simulation considers the Washington portion of the Spokane River, and the third simulation considers Long Lake. Model predictions at the downstream boundary of each of the first two simulations are directly passed to serve as input for the upstream boundary for the next simulation in the sequence.

Analysis of model results focused on the "special output" provided by PSU for the Long Lake TMDL, which corresponds to semi-monthly average minimum dissolved oxygen in the hypolimnion of each model segment. Particular focus was given to late August dissolved oxygen predictions for model segments 34 through 36 (formerly referred to as segments 186 through 188), which the TMDL scenarios identified as the critical time and locations for dissolved oxygen impacts.

Model Results

The scenarios in Table 1 were run on single processor computers, and the incremental impact of alternative Spokane County effluent limits on Long Lake dissolved oxygen was examined. The results are shown in Table 2 for the critical lake segments and time period. Spokane Alternative #1 is predicted to increase minimum hypolimnetic dissolved oxygen by 0.0099 to 0.012 mg/l. Spokane Alternative #2 is predicted to increase minimum hypolimnetic dissolved oxygen by 0.013 to 0.014 mg/l.

Table 2. Incremental Dissolved Oxygen Impacts at Critical Segments and Time

Scenario	Incremental Impact (mg/l)
Spokane Alt. #1	0.0099 – 0.012
Spokane Alt. #2	0.013 – 0.014

A complete listing on incremental impacts at all Long Lake segments and times is provided in the appendix.

References

Washington Department of Ecology, 2010. Spokane River and Lake Spokane Dissolved Oxygen Total Maximum Daily Load, Water Quality Improvement Report. Revised February, 2010. Publication No. 07-10-073.

Appendix
Incremental Dissolved Oxygen Impact (mg/) at All Segments and Times

These tables represent the incremental dissolved oxygen impacts associated with each scenario, and are created by calculating the difference between the scenario output and the results from TMDL. Negative numbers indicate that the scenario results in a lower dissolved oxygen than predicted by TMDL Alternative #1.

Spokane Alt. #1

							Julian Day									
Long Lake Segment	121	136	152	167	182	197	213	228	244	259	274	289	305	320	335	350
2																
3																
4																
5	0.0008	0.0002	0.0004	0.0038	0.0048	0.0037	0.0097	0.018	0.0103	0.0072	0.006	0.003	0.001	0	0.001	0
6	-0.028	-1E-04	0.0014	0.0045	0.0065	0.0018	0.0039	0.013	0.0118	0.0099	0.007	0.003	0.003	0.002	0.001	0.001
7	-0.019	0.0002	0.0028	0.0052	0.0064	0.0053	0.0092	0.0126	0.0139	0.012	0.007	0.005	0.003	0.002	0.001	0.001
8	0	0.001	0.003	0.005	0.0069	0.0045	0.0082	0.0133	0.0139	0.011	0.008	0.005	0.004	0.002	0	0.001
9	-0.001	0.0014	0.0029	0.005	0.0066	0.0049	0.0081	0.0128	0.014	0.0112	0.009	0.006	0.004	0.003	0.001	0.001
10	0	0.0022	0.0034	0.0052	0.0072	0.0057	0.008	0.012	0.0137	0.011	0.008	0.007	0.005	0.003	0.002	0.001
11	-0.004	0.0027	0.0035	0.005	0.0072	0.0061	0.0081	0.0113	0.0121	0.01	0.008	0.007	0.005	0.003	0.002	0.002
12	0.01	0.0026	0.004	0.006	0.0075	0.0078	0.0084	0.0098	0.011	0.0095	0.008	0.007	0.006	0.003	0.002	0.001
13	0.004	0.0026	0.004	0.006	0.0078	0.0099	0.0084	0.0083	0.0109	0.0093	0.0074	0.007	0.005	0.003	0.003	0.002
14	0.007	0.003	0.005	0.006	0.0073	0.0124	0.0087	0.0094	0.0114	0.0095	0.0078	0.008	0.007	0.004	0.003	0.001
15	0	0.004	0.004	0.0066	0.0077	0.0107	0.0086	0.0098	0.0113	0.0102	0.0076	0.008	0.007	0.004	0.003	0.002
16	0.002	0.004	0.004	0.0066	0.008	0.0097	0.0056	0.0169	0.0118	0.0101	0.0076	0.007	0.008	0.005	0.003	0.001
17	0.011	0.003	0.005	0.0063	0.008	0.0102	0.0055	0.0163	0.0121	0.0103	0.0077	0.007	0.007	0.005	0.003	0.002
18	-0.003	0.003	0.006	0.0063	0.008	0.0105	0.0053	0.0162	0.0129	0.0103	0.0073	0.007	0.007	0.005	0.003	0.001
19	-0.002	0.004	0.007	0.0064	0.008	0.0112	0.0052	0.0107	0.0143	0.0103	0.0072	0.006	0.007	0.005	0.003	0.002
20	-0.002	0.004	0.007	0.0065	0.008	0.0114	0.0069	0.0085	0.0164	0.0106	0.0073	0.0053	0.006	0.005	0.003	0.002
21	-0.001	0.004	0.0071	0.0068	0.008	0.0103	0.01	0.009	0.0177	0.0114	0.0075	0.005	0.006	0.004	0.004	0.003
22	0.001	0.004	0.0066	0.0068	0.0081	0.0089	0.0103	0.0103	0.0195	0.0121	0.0083	0.0052	0.005	0.004	0.003	0.002
23	0.001	0.004	0.0064	0.0067	0.008	0.0092	0.011	0.0097	0.019	0.0126	0.0083	0.0052	0.005	0.004	0.004	0.002
24	0.002	0.004	0.0064	0.0067	0.0081	0.0098	0.0126	0.0091	0.0186	0.0138	0.0084	0.0049	0.005	0.004	0.003	0.002
25	0.003	0.005	0.0055	0.0061	0.0079	0.0095	0.0125	0.0078	0.0176	0.0138	0.009	0.0052	0.005	0.004	0.003	0.002
26	0.002	0.005	0.0057	0.0062	0.0078	0.0097	0.0134	0.0072	0.0164	0.0142	0.0093	0.0054	0.0054	0.004	0.003	0.002
27	-0.001	0.004	0.0057	0.0062	0.008	0.0104	0.0131	0.0072	0.0155	0.0144	0.0098	0.0054	0.0048	0.004	0.003	0.002
28	0.002	0.004	0.0056	0.0061	0.0079	0.0101	0.0124	0.0083	0.0136	0.0147	0.0102	0.0056	0.0046	0.004	0.003	0.002
29	0.002	0.005	0.0055	0.0061	0.0079	0.0094	0.0119	0.0105	0.0117	0.0153	0.0111	0.0065	0.0049	0.004	0.003	0.003
30	0.003	0.004	0.0056	0.0063	0.0077	0.0087	0.0114	0.0118	0.0101	0.015	0.0113	0.0068	0.0052	0.004	0.003	0.003
31	0.004	0.0043	0.0053	0.0059	0.0073	0.0085	0.0115	0.0117	0.0093	0.0144	0.0119	0.007	0.0055	0.004	0.003	0.003
32	0.003	0.0044	0.0053	0.0059	0.0069	0.0082	0.0098	0.012	0.008	0.0135	0.0113	0.0069	0.0059	0.004	0.003	0.002
33	0.004	0.0044	0.0048	0.0057	0.0066	0.0075	0.0086	0.012	0.0074	0.0126	0.0108	0.0069	0.0075	0.004	0.003	0.002
34	0.003	0.0038	0.0046	0.0059	0.0066	0.0076	0.0088	0.012	0.0079	0.0122	0.0111	0.0072	0.0085	0.004	0.002	0.001
35	0.001	0.0038	0.0046	0.0061	0.0065	0.0074	0.0086	0.0118	0.0087	0.0119	0.0115	0.007	0.0078	0.004	0.003	0.001
36	0.003	0.0045	0.0041	0.0055	0.0055	0.006	0.0074	0.0099	0.008	0.01	0.0092	0.006	0.0051	0.004	0.003	0.002

Spokane Alt. #1

							Julian Day									
Long Lake Segment	121	136	152	167	182	197	213	228	244	259	274	289	305	320	335	350
2																
3																
4																
5	0.0367	-0.0022	0.0702	-0.0698	0.0036	0.0045	0.0079	0.0156	0.01	0.0053	0.006	0.003	-0.032	0	0.001	0
6	0.003	-0.0011	0.0124	0.0111	0.0054	0.0063	0.0035	0.0116	0.0143	0.0096	0.007	0.003	0.003	0.001	0.002	0.001
7	0.046	-0.0022	-0.0005	0.0193	0.0083	0.0071	0.0084	0.012	0.0153	0.0092	0.007	0.005	0.004	0.002	0.001	0.001
8	-0.001	-0.0019	-0.0164	0.024	0.0071	0.0054	0.0085	0.0126	0.016	0.0118	0.008	0.005	0.004	0.002	0	0.001
9	-0.002	-0.001	-0.0123	0.0355	0.0068	0.005	0.0085	0.0124	0.0156	0.0107	0.009	0.006	0.003	0.003	0.001	0.001
10	-0.003	0.0027	-0.0286	0.0323	0.0092	0.006	0.0086	0.0121	0.015	0.0111	0.009	0.007	0.005	0.002	0.002	0.001
11	-0.01	-0.0002	-0.0037	0.019	0.0111	0.0067	0.0089	0.0122	0.0138	0.0107	0.009	0.007	0.004	0.002	0.001	0.001
12	0.01	0.0017	0.006	0.02	0.0105	0.008	0.0091	0.0109	0.013	0.0101	0.009	0.007	0.005	0.001	0.002	0.001
13	0.003	0.0002	-0.001	0.022	0.0095	0.0083	0.0099	0.0103	0.0123	0.0102	0.0084	0.008	0.005	0.001	0.003	0.002
14	-0.001	0	0.009	0.017	0.0082	0.0064	0.0098	0.0123	0.0126	0.0113	0.0084	0.008	0.006	0.004	0.002	0.001
15	-0.005	0.002	0.016	0.0156	0.0071	0.0038	0.0096	0.0134	0.0128	0.0114	0.0082	0.008	0.007	0.006	0.002	0.002
16	-0.006	0	0.012	0.0111	0.0037	0.0021	0.0093	0.0215	0.0124	0.0106	0.0082	0.007	0.007	0.006	0.003	0.001
17	0.005	0	0.006	0.0185	0.0015	0.0024	0.0093	0.0222	0.0112	0.0101	0.0084	0.007	0.007	0.006	0.003	0.002
18	0.009	-0.004	0.006	0.0185	0.003	0.0035	0.0089	0.0234	0.0103	0.0101	0.008	0.007	0.007	0.005	0.003	0.001
19	0.009	0	0.008	0.0161	0.0039	0.0064	0.0093	0.0178	0.0088	0.0106	0.008	0.007	0.007	0.005	0.005	0.001
20	0.004	0.001	-0.003	0.016	0.001	0.0078	0.0097	0.0158	0.0102	0.0079	0.0079	0.0057	0.006	0.005	0.004	0.002
21	0.007	0	0.002	0.0174	0.0019	0.008	0.0095	0.0162	0.0142	0.0066	0.0081	0.0055	0.007	0.004	0.004	0.002
22	0.012	0.001	0.0039	0.0183	0.0038	0.0084	0.01	0.0179	0.0203	0.004	0.0083	0.0057	0.006	0.005	0.004	0.002
23	0.011	0.001	0.0025	0.0223	0.0064	0.0092	0.0106	0.0174	0.0201	0.0039	0.0075	0.0056	0.007	0.004	0.004	0.002
24	0.015	0.001	0.0045	0.0226	0.012	0.0117	0.0105	0.017	0.0218	0.008	0.0077	0.0053	0.005	0.004	0.004	0.002
25	0.033	0.002	0.006	0.0177	0.0164	0.0146	0.0124	0.0179	0.0257	0.0072	0.0073	0.0056	0.006	0.004	0.004	0.002
26	0.042	0.002	0.0043	0.0176	0.0204	0.0168	0.0128	0.0173	0.027	0.0113	0.0083	0.0056	0.0054	0.004	0.003	0.002
27	0.028	0.001	0.0046	0.0121	0.0236	0.0182	0.0129	0.0163	0.0262	0.0129	0.0078	0.0055	0.0046	0.004	0.004	0.002
28	0.023	-0.001	0.0047	0.0128	0.0252	0.0192	0.0132	0.0159	0.0227	0.0164	0.0086	0.0052	0.0045	0.004	0.003	0.002
29	0.02	-0.001	0.0022	0.0119	0.0258	0.0204	0.0137	0.0151	0.0203	0.0203	0.0082	0.0084	0.0047	0.005	0.004	0.003
30	0.021	-0.001	-0.0056	0.0087	0.0231	0.0203	0.0142	0.0143	0.0186	0.0239	0.0085	0.0112	0.0049	0.005	0.004	0.002
31	0.029	-0.0022	-0.0009	0.0123	0.0219	0.0204	0.0151	0.0147	0.0177	0.0245	0.0098	0.0082	0.005	0.005	0.004	0.002
32	0.038	-0.0014	0.0052	0.012	0.0174	0.0191	0.0146	0.0133	0.016	0.0241	0.0104	0.0082	0.0056	0.004	0.003	0.002
33	0.043	-0.0014	0.0021	0.0154	0.0127	0.0166	0.0145	0.012	0.0145	0.0226	0.0119	0.011	0.009	0.004	0.004	0.002
34	0.041	-0.0025	0.0024	0.0146	0.0137	0.018	0.0164	0.0133	0.0152	0.0245	0.0141	0.0065	0.0115	0.005	0.003	0.001
35	0.039	-0.0039	-0.0012	0.0154	0.0134	0.0185	0.018	0.0135	0.0156	0.024	0.017	0.0017	0.011	0.004	0.004	0.002
36	0.047	0.0009	-0.0021	0.016	0.0097	0.0153	0.0167	0.0127	0.0143	0.0208	0.0186	0.0261	0.0121	0.004	0.004	0.002

A6.1 INTRODUCTION

Wastewater treatment process considerations must be updated from the *2006 Wastewater Facilities Plan Amendment* to account for the changes to the effluent phosphorus requirements of the Washington State Department of Ecology's *Spokane River and Lake Spokane Dissolved Oxygen Total Maximum Daily Load Water Quality Improvement Report (Final TMDL).* Spokane County must meet a phosphorus wasteload allocation of 2.80 lbs/day based on a flow 8 mgd and the seasonal average phosphorus concentration target of 0.042 mg/L (March-October). A monthly average effluent total phosphorus concentration of 0.050 mg/L for the Spokane County Regional Water Reclamation Facility (SCRWRF) is combined with "target pursuit actions" for eliminating the delta between 0.050 mg/L and 0.042 mg/L phosphorus at 8 mgd average flow. This amendment describes the selected and approved technology for meeting the treatment process objectives.

The County's wasteload allocation is to be met by a combination of treatment technology and other phosphorus reduction actions. The *Final TMDL* document calls for the County to prepare a "delta elimination plan" to account for the difference between what advanced treatment technologies can achieve at 0.050 mg/L (3.34 lbs/day) and the County's seasonal wasteload allocation based on 0.042 mg/L (2.80 lbs/day). The County's "delta" is 0.54 lbs/day and will be met by a combination of nonpoint source reductions, as described in Chapter 11.

Changes to the Treatment Systems discussion as a result of the *Final TMDL* (February 2010) are as follows:

- A treatment alternative has been selected, approved by Ecology, designed, and is currently under construction. A brief description of the selected treatment process is described throughout this 2010 Amendment. Details on each unit process are available in the updated Primary Design Document (PDD).

- Key changes to the originally proposed liquids stream treatment process include a step feed nitrification/denitrification system with membrane filtration and chemical addition (ferric) for phosphorus removal.

- Key changes to the originally proposed solids stream treatment process include co-thickening of primary and secondary sludges using gravity belt thickeners, the use of a second-stage aerobic digester for nitrogen removal and solids storage, and the use of pumps for distribution of dewatered biosolids cake into transport trucks. The capability to pump dewatered solids to the aerobic digester for storage will be provided. No centrate equalization will be provided.

A6.2 ADVANCED WASTEWATER TREATMENT PROCESS PERFORMANCE

Chapter 173-221 WAC Discharge Standards and Effluent Limitations for Domestic Wastewater Facilities establishes surface water discharge standards which represent "all known, available, and reasonable methods of prevention, control, and treatment" (AKART) for domestic wastewater treatment facilities, as required by Chapter 90.48

RCW. These are often referred to as technology based standards. For domestic wastewater, AKART is considered to be secondary treatment, as presented in Chapter 173-221 WAC. However, if secondary treatment is not sufficient to meet water quality standards, additional treatment may be required. If the technology-based discharge standards or the alternative standards presented in Chapter 173-221 WAC are not sufficient to meet the water quality standards, then more stringent discharge requirements will apply. Since the Washington Department of Ecology's Dissolved Oxygen Total Maximum Daily Load (TMDL) phosphorus concentration target of 0.042 mg/L on a seasonal basis is so low, additional analysis regarding the limits of treatment technology has taken place since 2004. This analysis has included a survey of exemplary treatment plants producing very low effluent phosphorus, review of full-scale operating facilities and site visits, treatment equipment vendor presentations, and review of the results from pilot testing. The *2006 Wastewater Facilities Plan Amendment* analyzed several technologies that meet the requirements of AKART, and additionally meets the more stringent requirements of the *Final TMDL*.

A6.3 ADVANCED WASTEWATER TREATMENT PROCESS EVALUATION

The *2006 Wastewater Facilities Plan Amendment* considered four alternatives for advanced wastewater treatment to achieve significant phosphorus removal. Considerations were given to the proposed process design outlined in the *2002 Wastewater Facilities Plan* and the *2003 Wastewater Facilities Plan Amendment* which revolved around a membrane bioreactor designed for nitrification and denitrification (N/DN) with chemical addition for phosphorus removal. For the advanced wastewater treatment alternative analysis in the *2006 Wastewater Facilities Plan Amendment,* the *2003 Wastewater Facilities Plan Amendment* process design (AWT Alternative 1) was compared with three new process designs (AWT Alternatives 2 through 4):

- AWT Alternative 1 – Membrane bioreactor (MBR) with nitrogen removal and chemical phosphorus removal. Similar to the *2003 Wastewater Facilities Plan Amendment* process, but with additional chemical feed
- AWT Alternative 2 - Membrane bioreactor (MBR) with biological nutrient removal (BNR) and chemical polishing
- AWT Alternative 3 - Membrane bioreactor (MBR) with biological nutrient removal (BNR) and tertiary chemical polishing. Tertiary chemical polishing could be accomplished with a variety of treatment technologies such as BlueWater Technology Blue CEPT®, Parkson D2® dual sand filtration, US Filter Trident® HS-1, or an additional microfiltration membrane
- AWT Alternative 4 – Conventional activated sludge with tertiary membrane filtration

Following the facilities planning process, a request for proposals to design-build-operate (DBO) companies was issued. The RFP was based on the alternatives developed in the *2006 Wastewater Facilities Plan Amendment.* After the proposals were received and evaluated, a team was selected and a service contract was negotiated. The contract covered all aspects of the design, construction and operation of the SCRWRF over a

twenty year horizon. Following contract negotiations, the DBO contractor updated the PDD to reflect the actual design. The updated PDD was used along with 100 percent design drawings to update this chapter.

A6.3.9 Selected Treatment Process

The selected advanced wastewater treatment process combines step feed nitrogen removal (nitrification and denitrification) with MBR technology. The process will rely solely on chemical removal to meet the low effluent phosphorus limit. Ferric will be added upstream of grit removal or upstream of the membrane tank (Figure A6-6 and Drawing A6-1). The process design consists of the following key elements:

- Fine screening
- Grit removal
- Primary clarification
- Step Feed Nitrification/Denitrification MBR system
- Sodium hypochlorite effluent disinfection
- Gravity belt thickening for primary and waste activated sludge
- Anaerobic digestion
- Aerobic digestion/solid storage
- Centrifuge dewatering
- Ferric feed upstream of grit removal
- Ferric feed to membrane tank influent for polishing

The design flows and loads and projected process performance are included in the mass balance summary in Table A6-5.

A6.4 PROJECTED EFFLUENT PERFORMANCE

This section briefly summarizes the selected treatment facilities that will be incorporated in the SCRWRF. Two phases of construction are planned to provide the required facilities for this design.

- Phase 1 will provide an average capacity of 8 mgd and will be operational by the end of 2011 and fully completed in 2012.
- Phase 2 will increase average capacity to 12 mgd, and is anticipated in approximately the year 2031.

A6.4.1 Design Flows and Loads

Design flows and loadings for the SCRWRF are summarized in Table A6-3 (Projected Flows and Loadings). Upon startup of the new facility, the County expects to be able to divert up to 8 mgd of sewage flows from North Valley Interceptor (NVI) and the Spokane Valley Interceptor (SVI) to the SCRWRF. In 2012 this is likely to be up to all

of the sewage flows in those pipelines. The objective is to maximize use of the design capacity in the SCRWRF to treat County flows. Any excess flow generated in the County's Valley service area will be sent through the NVI and/or SVI to the Spokane RPWRF.

A6.4.2 Process Schematics

The overall process schematic drawings of the liquid and solids treatment processes are presented in Drawing A6-1 (Overall Liquids Process Schematic) and Drawing A6-2 (Overall Solids Process Schematic), respectively. (These drawings are at the end of this 2010 Amendment to Chapter 6).

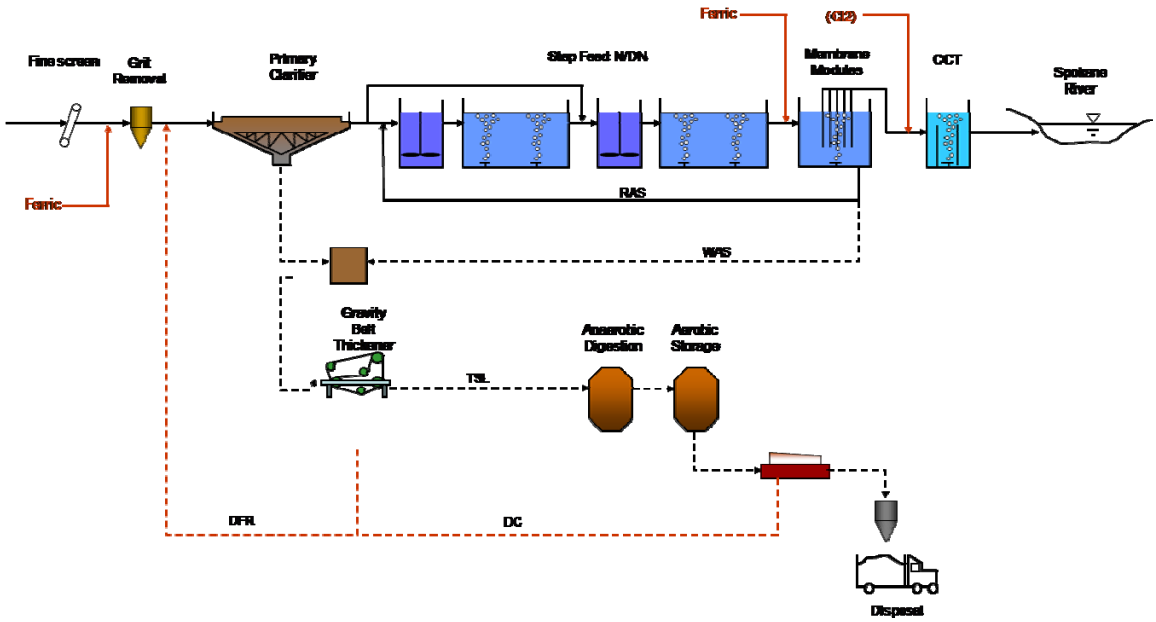

Figure A6-6. Schematic of WWTP Process Design

A6.4.3 Mass Balance

A mass balance diagram of operation of the plant during is presented in Table A6-5 (Mass Balance).

A6.4.4 Unit Process Design Criteria

Table A6-4(Summary of Design Criteria) summarizes design criteria for each unit process. These are the 100 percent design values for the treatment plant (CH2M Hill, 2009).

Table A6-3. Projected Flows and Loadings

	Phase 1	Phase 2	DBO
Septage			
Flow, gpd	24,000	24,000	-
BOD_5, lb/d	1,200	1,200	-
Total Suspended Solids, lb/d	3,000	3,000	-
Total Nitrogen, lb/d	140	140	-
Total Phosphorus, lb/d	50	50	-
Influent From Pump Stations[1]			
Average Day			
Flow, mgd	8.0	12.0	-
BOD_5, lb/d	16,000	23,800	-
Total Suspended Solids, lb/d	16,000	23,800	-
Total Nitrogen, lb/d	2,700	4,000	-
Total Phosphorus, lb/d	480	710	-
Maximum Month			
Flow, mgd	8.5	12.6	-
BOD_5, lb/d	17,000	25,200	-
Total Suspended Solids, lb/d	17,000	25,200	-
Total Nitrogen, lb/d	2,800	4,200	-
Total Phosphorus, lb/d	510	750	-
Maximum Day			
Flow, mgd	12.1	17.8	-
BOD_5, lb/d	24,300	35,600	-
Total Suspended Solids, lb/d	24,300	35,600	-
Total Nitrogen, lb/d	4,000	5,900	-
Total Phosphorus, lb/d	730	1,100	-
Peak Hour			Phase 1 – 13.8 Phase 2 – 20.58
Flow, mgd	18.4	26.4	
Temperature			
Summer, ^oC	17	17	
Winter , ^oC	12	12	

All values except temperature apply to both summer and winter loading conditions.

Table A6-4. Summary of Design Criteria[1]

Component	Phase 1	Phase 2
LIQUID PROCESS COMPONENTS		
Septage		
Trucks per day (assuming 1,000 gal per truck)	24	24
Holding Tank		
Number	1	1
Volume, gal	4,000	4,000
Pumps		
Type	Recessed Impeller	Recessed Impeller
Number	2	2
Capacity, gpm	250	250
Influent Flow Measurement		
Type	Magnetic Meter	Magnetic Meter
Number	4	4
Location	NVI and SVI Force Mains	NVI and SVI Force Mains
Preliminary Treatment		
Fine Screens		
Number	2	2
Type	Bandscreen	Bandscreen
Screen opening, mm	2	2
Capacity, each, mgd	13.8	13.8
Screenings Washer/Compactor		
Number	2	3
Capacity, each, cu ft/hr	150	150
Grit Removal Units		
Number	1	1
Type	Aerated Grit Tanks	Aerated Grit Tanks
Capacity, each, mgd	24	24
Grit Pumps		
Type	Recessed Impeller Centrifugal	Recessed Impeller Centrifugal
Number	3	3
Capacity, gpm	220	220
Grit Concentrators		

Component	Phase 1	Phase 2
Type	Cyclone	Cyclone
Number	2	2
Capacity, gpm	220	220
Grit Classifiers		
Type	Dual Cyclone Auger	Dual Cyclone Auger
Number	1	1
Size	12-inch	12-inch
Primary Treatment		
Primary Clarifiers		
Number	2	3
Diameter, ft	65	65
Sidewater depth, ft	12	12
Overflow rate, gpd/sf		
Average	1,253	1,253
Max. month	1,328	1,312
Max. day	1,870	1,834
Peak hour	2,196	2,203
Primary Sludge Pumps (sized for CEPT)		
Number	3	4
Type	Peristaltic	Peristaltic
Capacity, each, gpm	163	163
Primary Scum Pumps		
Number	1	2
Type	Progressive cavity	Progressive cavity
Capacity, each, gpm	50	50
Biological Treatment Trains		
Number	4	6
Activated sludge tanks side water depth, ft	18	18
Membrane tanks side water depth, ft	10	10
Anoxic Zone (Summer)		
Active Volume, total, 1000 gal	536	660
Detention Time, (MMF), hr	NA	1.26
Summer MLSS mg/L	Pass 1 – 6,700 Pass 2 – 7400	Pass 1 – 6,700 Pass 2 – 7,400

Component	Phase 1	Phase 2
Anoxic Internal Recycle (MMF)	Pass 1 – 300% Pass 2 – None	Pass 1 – 300% Pass 2 None
Anoxic Mixed Liquor Recycle Pumps		
Number per train	3	3
Total number	6	9
Type	Axial Flow	Axial Flow
Capacity, each, gpm	1,475	1,475
Anoxic Zone Mixers		
Number per train	5	5
Total number	20	20
Type	Submersible	Submersible
Aerobic Zone (Summer)		
Active Volume, total, 1000 gal	797	1,122
Detention Time, (MMF), hr	NA	2.14
Summer MLSS mg/L	Pass 1 – 8,000 Pass 2 – 7,400	Pass 1 – 8,000 Pass 2 – 7,400
Return Activated Sludge (MMF)	400%	400%
Membrane Zone		
Active Volume, total, 1000 gal (varies by manufacturer)	250	375
Detention Time, (MMF), hr	NA	NA
Summer MLSS mg/L	9,200	9,200
Summer Operating Mode		
Active Volume, total, 1000 gal	1,507	3,300
Detention time, max. month, hr	4.14	6.29
Average MLSS mg/L	7,600	9,000
Winter Operating Mode		
Active volume, total, 1000 gal (all aerobic)	1,507	3,300
Detention time, max. month, hr	4.14	6.29
Average MLSS mg/L	7,600	9,000
Air Supply		
Aeration Basin Diffusers		
Type	Fine bubble	Fine bubble
Material	Membrane	Membrane
Process air (ADF) scfm	7,900	6,750
Process Air Blowers		

Component	Phase 1	Phase 2
Number	3	5
Type	Variable Speed Turbo	Variable Speed Turbo
Capacity each, scfm	5,750	5,750
Membrane Air Scour Blowers		
Air required (coarse bubble) scfm	10,200	23,250
Number	3	6
Type	Variable Speed Turbo	Centrifugal
Capacity each, scfm	4,500	4,500
Membrane Subtrains		
Number per biological train (varies by manufacturer)	NA	NA
Total number	6	9
Membrane Quantity		
Minimum design temperature, winter, °C	12	12
Minimum design temperature, summer, °C	17	17
Number of membrane subtrains	6	9
Firm Capacity (one subtrain out of service) Design Flux @12 °C for MDF, gsfd	12.1	12.6
Firm Capacity (one subtrain out of service) Design Flux @12 °C for PHF, gsfd	15.3	18.8
Permeate Pumps		
Type	Horizontal Centrifugal	Horizontal Centrifugal
Number per subtrain	1	1
Total number	6 duty (one shelf)	6 duty (one shelf)
Capacity, each, gpm	1,970	1,970
WAS Pumps		
Type	Submersible, Adjustable Speed	Submersible, Adjustable Speed
Number	2	2
Capacity, each, gpm	120	120
Backpulse/CIP Pumps (varies with manufacturer)		

Component	Phase 1	Phase 2
Type	Horizontal Centrifugal	Horizontal Centrifugal
Number	2	3
Capacity, each, gpm	1,970	1,970
Chlorine Contact Tanks		
Number	2	2
Contact Time, Average Annual, min	60	60
Volume, each, 1000 gal	168	168
Chemical Feed Systems		
Ferric Chloride Storage Tanks		
Number	3	3
Volume, each, gallons	8,700	8,700
Diameter, ft		
Height, ft		
Sodium Hypochlorite Storage Tanks		
Number	2	2
Volume, each, gallons	4,400	4,400
Diameter, ft		
Height, ft		
Sodium Bisulfite Storage Tanks		
Number	2	2
Volume, each, gallons	Tote	Tote
Diameter, ft		
Height, ft		
Ferric Chloride Feed (CEPT for P Removal)		
Average dosage, mg/L	35	35
Storage period, days	7	7
Feed pumps		
Number	2	2
Type	Diaphragm	Diaphragm
Capacity, each, gph	75	75
Ferric Chloride Feed (Secondary Polishing)		
Average dosage, mg/L	25	25
Storage period, days	7	7
Feed pumps		
Number	2	2

Component	Phase 1	Phase 2
Type	Diaphragm	Diaphragm
Capacity, each, gph	40	40
Sodium Hypochlorite Feed (CIP)		
Storage period, days	30	30
Feed pumps		
Number	2	2
Type	Diaphragm	Diaphragm
Capacity, each, gph	300	300
Sodium Hypochlorite Feed (Disinfection)		
Storage period, days	30	30
Feed pumps		
Number	3	3
Type	Diaphragm	Diaphragm
Capacity, each, gph	20	20
Citric Acid Feed (CIP)		
Storage period, days	60	60
Feed pumps		
Number	2	2
Type	Diaphragm	Diaphragm
Capacity, each, gph	300	300
SOLIDS HANDLING COMPONENTS		
Gravity Belt Thickener		
Number	2	2
Solids Capture, percent	95	95
Thickened Sludge Pumps		
Number	2	2
Type	Progressive cavity	Progressive cavity
Capacity, each, gpm	50	50
GBT Feed Pumps		
Number	2	2
Type	Progressive cavity	Progressive cavity
Capacity, each, gpm	450	450
Anaerobic Digesters		
Number	2	3
Volume, each, 1,000 gal	550	550
Diameter, ft	38	38

Component	Phase 1	Phase 2
Sidewater Depth, ft	64	64
Solids Retention Time, days (with one out of service)	18	18
Mixing System		
Type	External, Hydraulic	
Mixing Pumps		
Number	2	2
Type	External Draft Tube	External Draft Tube
Capacity, each, gpm	9,200	9,200
Heat Exchangers		
Number	2	2
Capacity, each MMBTU	0.825	0.825
Liquid Biosolids Storage Tank/Second Stage Aerobic Digester		
Number	1	1
Volume, each, 1,000 gal	700	700
Diameter, ft	78	78
Sidewater Depth, ft	20	20
Mixing System		
Type	Coarse-bubble Aeration	
Dewatering Centrifuges		
Number	2	2
Type	High solids	High solids
Drive	Variable Speed	Variable Speed
Capacity, each, gpm	125	125
Capacity, each lbs/hr	1,560	1,560
Solids Capture, percent	95	95
Dewatered cake solids concentration, percent	25	25
Feed Pumps		
Number	3	3
Type	Progressive Cavity	Progressive Cavity
Drive	Variable Speed	Variable Speed
Capacity, each, gpm	125	125
Dewatered Sludge Pumps		
Number	2	2
Type	Progressive Cavity	Progressive Cavity

Component	Phase 1	Phase 2
Drive	Variable Speed	Variable Speed
Capacity, each, gpm	15	15
Poly Feed System		
Type	Liquid Feed System	
Cationic Polymer Metering Pumps (GBT)		
Number	2	2
Type	Progressive Cavity	Progressive Cavity
Capacity, each, gph	250	250
Cationic Polymer Metering Pumps (Centrifuge)		
Number	3	3
Type	Progressive Cavity	Progressive Cavity
Capacity, each, gph	1,485	1,485
SITE SUPPORT SYSTEMS		
Non-Potable and Irrigation Water Pumps		
Number	3	3
Type	Centrifugal	Centrifugal
Capacity, each, gpm	600	600
Plant Drainage Pumps		
Number	2	2
Type	Non Clog Submersible	Non Clog Submersible
Capacity, each, gpm	500	500

[1]Design criteria are based on the 100% Design current as of December 2009

A6.5 PRELIMINARY SITE LAYOUT

The public entrance is from Freya Street and will provide access to the administration and laboratory buildings. Any public amenities built into the project (e.g., public safety facilities, public meeting rooms, etc.) would be accessible by this entrance. Extending Julia Street (via a County-owned private driveway south of Boone Avenue) to the plant site will provide an operational entrance. All truck traffic associated with septage hauling, biosolids hauling, chemical deliveries, equipment deliveries, and general operation and maintenance will use this entrance.

A6.6 SUMMARY DESCRIPTION OF UNIT PROCESSES

The following narrative summarizes the selected and designed unit processes. Information is from the Primary Design Document that was updated by the DBO contractor, as well as the DBO contract.

A6.6.1 Influent Flow Measurement and Influent Junction Box

Influent flow measurement will be provided by magnetic flow meters located along the force mains from the SVI Pumping Station and the NVI Pumping Station. The force mains will discharge to an influent junction box that will divide flow between the initial headworks structure (to serve Phase 1 and 2 flows) and a future headworks structure (to serve flows beyond Phase 2).

A6.6.2 Septage Handling

A septage-receiving tank will be placed on the treatment plant site. To discharge to the tank, septage haulers will drive into a small enclosure that will shield the operation from view, provide weather protection to the haulers, and provide odor containment. Septage will be pumped to the influent junction box.

A6.6.3 Preliminary Treatment

Preliminary treatment includes the previously described influent junction box as well as plant influent flow distribution, fine screening, grit removal, screenings handling, grit handling, and other ancillary facilities. Downstream of the fine screens an aerated grit chamber will be provided for grit removal as well as mixing and contact time for the ferric addition. This part of the process serves as chemically enhanced primary treatment for phosphorus removal. The removed grit will be pumped to a washer.

A6.6.4 Primary Treatment

A primary influent flow split structure will be built to receive flow from the headworks and plant recycle streams, and to distribute this flow to primary clarifiers. To provide a maximum-month capacity of 8.5 mgd, two clarifiers will be built initially. A third unit will be added in Phase 2 to increase capacity to 12.6 mgd. During the summer permit season, ferric will be fed ahead of the clarifiers to chemically precipitate phosphorus. Primary sludge will be pumped to a sludge blending tank where it is blended with waste activated sludge prior to being pumped to the gravity belt thickeners and then to the anaerobic digesters. A primary sludge and scum pumping station will be built adjacent to the clarifiers.

The selection of chemical phosphorus removal and chemically enhanced primary treatment over conventional biological phosphorus removal with chemical polishing provides the following advantages;

- Minimizing of the action tank volume
- Maximizing of digester gas production and energy cogeneration
- Simplified control of the effluent phosphorus concentration

The primary disadvantages of the chemical phosphorus removal process are the chemical cost and increased sludge volumes that have to be accommodated in the solids processing facility.

A6.6.5 Fine Screening

The fine-screening facility will be built to remove material larger than 2 millimeters (mm). Fine screening is required to protect the MBRs. Removed screenings will be washed, compacted, and stored prior to haul.

A6.6.6 Secondary Treatment including Membrane Bioreactors

The step feed N/DN system consists of four parallel aeration trains followed by six MBR tanks. The initial design flow is 8 mgd. The site layout allows for a maximum of two additional trains with maximum total capacity of 24 MGD.

The *2006 Wastewater Facilities Plan Amendment* proposed biological phosphorus removal. The PDD and subsequent DBO contract proposed using chemical treatment for phosphorus removal. Nitrogen removal will be achieved biologically in the aeration basins. Enhanced biological phosphorus removal has been removed from the design. Chemical phosphorus removal will be accomplished in two stages through ferric addition upstream of the aerated grit chambers and upstream of the membrane tanks. The ferric addition to the first phosphorus removal stage also provides chemically enhanced primary clarification. This lowers the organic load to the secondary treatment system, requiring less air and less aeration basin volume. The ferric addition to the aeration basin effluent serves as a polishing step to capture soluble reactive phosphorus that was released during the secondary treatment.

A6.6.7 Effluent Flow Measurement

A magnetic flow meter will be provided to measure effluent flow. This facility will be located upstream of the sodium hypochlorite disinfection facility to provide a flow signal to control chlorination and dechlorination chemical feeds.

A6.6.8 Disinfection and Dechlorination

Disinfection will be provided using a liquid sodium hypochlorite system followed by a liquid sodium bisulfite dechlorination facility. Two channels will be installed with sufficient hydraulic capacity to handle projected peak flows at buildout with a split of effluent flows to multiple locations, including outfall to river, on-site landscape irrigation, internal process water, and larger volume effluent reuse. Some of these effluent end uses will not require dechlorination. However, the design and construction shall provide provisions for all of these uses. The dechlorination system will be designed for full plant flow to maintain 100 percent discharge to the river outfall and the system shall be designed to control chlorine residual to meet NPDES permit limitations in the effluent discharge. The system shall also be capable of maintaining a chlorine residual in effluent diverted to reuse, as required to meet Class A reclaimed water standards for effluent reuse in urban irrigation, industrial reuse, and wetlands restoration. The entire facility will be enclosed in a building.

A6.6.10 Reclaimed Water Pumping

The County intends to implement a reclaimed water program, providing Class A reclaimed water for reuse in urban irrigation, industrial reuse, and wetlands restoration. Consequently, the site layout and hydraulic profile will accommodate a reclaimed water pumping station, as shown on the liquid process schematic and site layout (Drawing 6-1 and Drawing 6-5). Piping for reclaimed water will be provided within the plant site as part of the Phase I construction. The primary disinfectant for the reclaimed water will be liquid sodium hypochlorite capable of maintaining a disinfectant residual in the reclaimed water distribution system which meets the State of Washington criteria for Class A reclaimed water.

A6.6.11 Chemical Feed Systems

A chemical feed and storage building will be constructed to house the following feed systems: ferric, sodium hypochlorite, citric acid, polymer, methanol, supplemental alkalinity addition (if required), and other chemical systems necessary to meet effluent phosphorus discharge limits and maintain the MBR system and other plant systems.

A6.6.12 Primary Sludge and Waste Activated Sludge Thickening

Primary sludge and waste activated sludge (WAS) will be pumped to a blended sludge storage tank. Blended sludge will then be co-thickened by gravity belt thickeners (GBTs). The thickened sludge will then be pumped to the anaerobic digestion process.

A6.6.14 Anaerobic Digestion

Sludge stabilization will be accomplished using single-stage mesophilic anaerobic digestion followed by aerobic digestion. Initially, two digesters will be constructed to meet Phase 1 capacity requirements. A digester equipment building will house gas handling equipment, and energy recovery facilities.

A6.6.15 Aerobic Digestion/Liquid Biosolids Storage

Liquid biosolids storage will be provided in the aerobic digester. This facility will provide a minimum storage time of five days in the event that bad weather prevents haul of dewatered biosolids to application sites. The aerobic digester will also provide dewatered biosolids storage as described in Section A6.6.17. Additional solids degradation will take place in the aerobic digester. Nitrification/denitrification in the aerobic digester is expected to reduce the nitrogen recycle load from the dewatering centrate to the liquids stream process.

A6.6.16 Digester Gas Management

Digester gas generated in the anaerobic digestion process will be recovered in a system that includes scrubbing, gas storage, and cogeneration facilities. Digester gas will be stored in a separate membrane storage tank. The gas will be used in boilers and cogeneration facilities to heat the sludge as it enters the digesters and maintain digester temperature by heating recirculating sludge. Electrical power produced in the cogeneration system will be used in the treatment facility and/or fed to the electrical

power utility. A waste gas incineration system will be provided for unused gas during periods when the gas utilization system is out of service.

A6.6.17 Solids Dewatering

Two solids centrifuges along with centrifuge feed pumps and a polymer feed system will be provided. The centrifuges will be located in the solids facility and discharge to dewatered solids pumps for conveyance to the dewatered biosolids hopper or for return to the aerobic digester for storage.

A6.6.18 Dewatered Biosolids Storage

No dewatered biosolids hopper will be provided as biosolids will be stored in trucks. Longer term dewatered solids storage will be provided in the aerobic digester in the event of a need for longer term storage due to inclement weather.

Centrate from the dewatering operation will be drained to the solids facility manhole for return to the liquids treatment process.

Table A6-5. Liquids and Solids Mass Balance[1]

LIQUIDS MASS BALANCE: AVERAGE DAY (ALL UNITS IN SERVICE)												
ID	FLOWSTREAM	FROM	TO	Flow	BOD_5		TSS		TKN		TP	
				(mgd)	(mg/L)	(lb/d)	(mg/L)	(lb/d)	(mg/L)	(lb/d)	(mg/L)	(lb/d)
1	RS	Influent PS	Headworks (Note 2)	8.0	240	16,000	240	16,000	40	2700	7	480
2	PI	Headworks	Primary Clarifiers	8.6	250	17,900	290	20,900	40	2900	8	590
3	PE	Primary Clarifiers	Aeration Basins	8.4	150	10,600	120	8,400	40	2900	3	590
4	NR	Bioreactor Pass 4	Bioreactor Pass 1	20.8	---	---	7,700		---	---	---	---
5	RAS	Membrane Tanks	Bioreactor Pass 3	32.0	---	---	9,100		---	---	---	---
6	SE	Membrane Tanks	Chlorine Contact Basins	8.3	1	90	1	70	2	110	0.04	3
7	PLE	Chlorine Contact Basins	Outfall	8.3	1	90	1	70	2	110	0.04	3
		Septage	Fine Screen Inlet Channel	24,000 (gpd)	6,000	1,200	15,000	3,000	700	140	250	50
	SCR	Fine Screens	Screen Washer/Compactor	50 (ft^3/d)	---	---	---	---	---	---	---	---
	GR	Grit Basin	Grit Washer/Compactor	30 (ft^3/d)	---	---	---	---	---	---	---	---
	PSM	Primary Clarifiers	Anaerobic Digester	2000 (gpd)	---	---	---	---	---	---	---	---
	PD	Plant Drain Pump Station	Headworks	450 (gpm)	---	---	---	---	---	---	---	---
SOLIDS MASS BALANCE: AVERAGE DAY (ALL UNITS IN SERVICE)												
ID	FLOWSTREAM	FROM	TO	Flow			TSS		TKN		TP	
				(gpd)			(mg/L)	(lb/d)	(mg/L)	(lb/d)	(mg/L)	(lb/d)
8	PS	Primary Clarifiers	Blended Sludge Storage Tank	196,200			10,000	16,400	170	280	220	370
9	WAS	Bioreactors	Blended Sludge Storage Tank	148,200			7,000	8,700	300	370	180	220
10	BS	Blended Sludge Storage Tank	Gravity Belt Thickener	344,400			8,700	25,000	220	360	200	590
11	TS	Gravity Belt Thickener	Anaerobic Digester	57,100			50,000	23,800	1,200	560	1,170	560
12	DS	Anaerobic Digester	Aerobic Digester	57,100			29,200	13,900	1,000	480	1,170	560
13	DG	Anaerobic Digester	Co-Generation	90 (cfm)			---	---	---	---	---	---
14	DS	Aerobic Digester	Dewatering Centrifuges (Note 5)	57,100			26,800	12,800	310	150	1,170	560
15	DWS	Dewatering Centrifuges	Truck for Off-Site Hauling (Note 5)	7,300			200,000	12,100	2,200	130	8,700	530
16	FLT	Gravity Belt Thickener	Solids Facility Manhole	503,300			300	1,300	20	80	7	30
17	CEN	Dewatering Centrifuges	Solids Facility Manhole	84,100			910	640	25	20	40	30
18	FLT/CEN	Solids Facility Pump Station	Headworks	587,400			390	1,900	20	100	10	60
LIQUIDS MASS BALANCE: MAX MONTH (ALL UNITS IN SERVICE)												
ID	FLOWSTREAM	FROM	TO	Flow	BOD_5		TSS		TKN		TP	
				(mgd)	(mg/L)	(lb/d)	(mg/L)	(lb/d)	(mg/L)	(lb/d)	(mg/L)	(lb/d)
1	RS	Influent PS	Headworks (Note 2)	8.5	240	17,000	240	17,000	40	2,800	7	510
2	PI	Headworks	Primary Clarifiers	9.1	250	18,900	290	22,000	40	3,000	8	620
3	PE	Primary Clarifiers	Aeration Basins	8.9	150	11,200	120	8,800	37	3,000	3	240
4	NR	Bioreactor Pass 4	Bioreactor Pass 1	22.0	---	---	7,700		---	---	---	---
5	RAS	Membrane Tanks	Bioreactor Pass 3	31.5	---	---	9,500		---	---	---	---
6	SE	Membrane Tanks	Chlorine Contact Basins	8.8	1	100	1	70	2	120	0.04	3
7	PLE	Chlorine Contact Basins	Outfall	8.8	1	100	1	70	2	120	0.04	3
		Septage	Fine Screen Inlet Channel	24,000 (gpd)	6,000	1,200	15,000	3,000	700	140	250	50
	SCR	Fine Screens	Screen Washer/Compactor	60 (ft^3/d)	---	---	---	---	---	---	---	---
	GR	Grit Basin	Grit Washer/Compactor	35 (ft^3/d)	---	---	---	---	---	---	---	---
	PSM	Primary Clarifiers	Anaerobic Digester	2125 (gpd)	---	---	---	---	---	---	---	---
	PD	Plant Drain Pump Station	Headworks	450 (gpm)	---	---	---	---	---	---	---	---
SOLIDS MASS BALANCE: MAX MONTH (ALL UNITS IN SERVICE)												

ID	FLOWSTREAM	FROM	TO	Flow			TSS		TKN		TP	
				(gpd)			(mg/L)	(lb/d)	(mg/L)	(lb/d)	(mg/L)	(lb/d)
8	PS	Primary Clarifiers	Blended Sludge Storage Tank	206,700			10,000	17,250	170	280	220	390
9	WAS	Bioreactors	Blended Sludge Storage Tank	160,100			6,800	7,100	290	390	170	230
10	BS	Blended Sludge Storage Tank	Gravity Belt Thickener	366,800			8,600	26,400	220	670	200	620
11	TS	Gravity Belt Thickener	Anaerobic Digester	60,100			50,000	25,100	1,180	590	1,200	590
12	DS	Anaerobic Digester	Aerobic Digester	60,100			29,100	14,600	1,000	500	1,200	590
13	DG	Anaerobic Digester	Co-Generation	95 (cfm)			---	---	---	---	---	---
14	DS	Aerobic Digester	Dewatering Centrifuges (Note 5)	60,100			26,700	13,400	310	160	1,200	590
15	DWS	Dewatering Centrifuges	Truck for Off-Site Hauling (Note 5)	7,600			200,000	12,700	2,200	140	8,800	590
16	FLT	Gravity Belt Thickener	Solids Facility Manhole	522,800			300	1,300	20	80	7	30
17	CEN	Dewatering Centrifuges	Solids Facility Manhole	86,700			920	770	25	20	40	30
18	FLT/CEN	Solids Facility Manhole	Headworks	609,500			400	2,000	20	100	10	60

[1] Mass balance information is from DBO Contractor's 100 percent design drawings (CH2M Hill, 2009)
[2] Note 2: Raw sewage flow and characteristics are listed for total flowstream pumped to the fine screens at the Headworks Facility.
[3] The TKN and TP values are estimates for solids processes. Industry experience and data on the operation of anaerobic digestion and aerobic digestion in series are limited.
[4] Solids mass balance values assume 7-day per week operation of thickening processes and 5-day per week operation of dewatering processes.
[5] Total for unit process

A6.7 AESTHETIC CONCEPT AND IMPACT MITIGATION MEASURES

The County's intent is to create a treatment plant site that is aesthetically attractive and compatible with surrounding uses. Examples of facilities that the County has cited to the public are the treatment plants built in Vancouver (Marine Park) and Edmonds, WA.

A6.7.1 Architecture

The architectural concept selected for the site was developed based on a series of workshops with neighbors of the proposed site and other stakeholders. To give the public some idea as to what the site may look like, an initial series of computer sketches were developed. The final site plan of the facilities is presented in Drawing A6-3 (Final Site Plan)

The facility site is located in a primarily industrial neighborhood. The design concept for the facility borrows both building forms and materials to blend with its locality. The construction palette includes durable and low-maintenance finishes such as exposed concrete and prefinished steel siding and roofing. The straightforward nature of the facilities is accented by construction systems that are of at least a "commercial" grade, with custom or premium level of finishes. The Water Resource Center, Treatment Operations Facility, and Maintenance Facility will receive an enhanced level of architectural treatment to distinguish them from treatment process facilities.

Nearly all treatment processes will be housed inside one- or two-story structures. These structures are sized to adequately accommodate the treatment process equipment and their service clearances. Additionally, these buildings will screen equipment and piping from view, provide acoustical and odor control, and offer architectural interest to an otherwise utilitarian facility. A variety of roof slopes over simple building forms create an image more commonly associated with commercial shopping malls or light industry campuses, and avoids the traditional treatment plant look.

A6.7.2 Landscaping

The facility site will be landscaped to soften the appearance of the facilities and to provide an attractive buffer between it and adjoining properties. More formal and extensive landscaping will be implemented around the plant entrance of Freya Street; around the Water Resource Center and Treatment Operations Facility; and along the northern and eastern property lines. The overall landscaping scheme and choice of materials will be consistent with other attractive industrial campuses in the Spokane area.

A6.7.3 Odor Control

All significant sources of odors will be enclosed in buildings or covered, including the following unit processes:

- Septage handling structure
- Headworks (including grit basins)

- Primary influent split box
- Primary clarifiers
- Aeration basins
- Aerobic digester
- Solids handling building including at individual gravity belt thickeners and centrifuges.

Exhaust air from these structures will be routed to a compost filter bed for odor scrubbing. Initially, three compost beds will be installed. This will allow effective control of odor when the compost media is replaced in one of the beds.

To reduce the quantity of air that must be passed through the biofilters, it is anticipated that a portion of the foul air collected from selected unit processes will first be routed to the MBR process for use as an air supply for the process air and membrane scour systems. The exhaust air from the MBR tanks would then be sent to the biofilters.

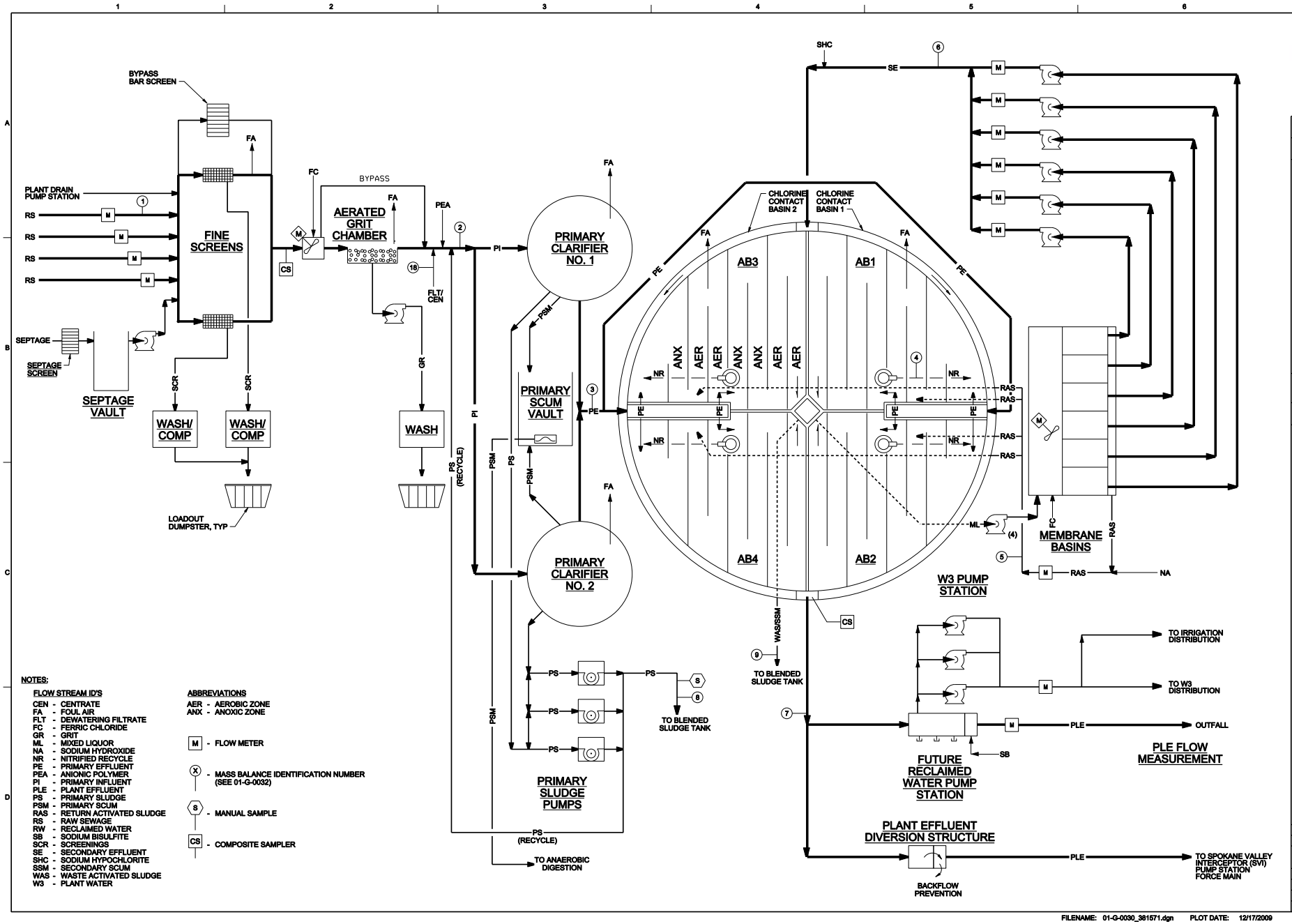

NOTES:

FLOW STREAM ID'S

- CEN - CENTRATE
- FA - FOUL AIR
- FLT - DEWATERING FILTRATE
- FC - FERRIC CHLORIDE
- GR - GRIT
- ML - MIXED LIQUOR
- NA - SODIUM HYDROXIDE
- NR - NITRIFIED RECYCLE
- PE - PRIMARY EFFLUENT
- PEA - ANIONIC POLYMER
- PI - PRIMARY INFLUENT
- PLE - PLANT EFFLUENT
- PS - PRIMARY SLUDGE
- PSM - PRIMARY SCUM
- RAS - RETURN ACTIVATED SLUDGE
- RS - RAW SEWAGE
- RW - RECLAIMED WATER
- SB - SODIUM BISULFITE
- SCR - SCREENINGS
- SE - SECONDARY EFFLUENT
- SHC - SODIUM HYPOCHLORITE
- SSM - SECONDARY SCUM
- WAS - WASTE ACTIVATED SLUDGE
- W3 - PLANT WATER

ABBREVIATIONS

- AER - AEROBIC ZONE
- ANX - ANOXIC ZONE
- M - FLOW METER
- X - MASS BALANCE IDENTIFICATION NUMBER (SEE 01-G-0032)
- S - MANUAL SAMPLE
- CS - COMPOSITE SAMPLER

NO.	DATE	REVISION	BY	APVD

DSGN DJ CHADWICK | DR PM HAMLIN | CHK BA YOUKER | APVD DJ GRIGSBY

SPOKANE COUNTY
REGIONAL WATER RECLAMATION FACILITY

CH2MHILL

GENERAL
LIQUIDS
PROCESS FLOW DIAGRAM

VERIFY SCALE
BAR IS ONE INCH ON ORIGINAL DRAWING.
0 1"

DATE	JANUARY 2010
PROJ	381571
DWG	01-G-0030
SHEET	28

REUSE OF DOCUMENTS: THIS DOCUMENT, AND THE IDEAS AND DESIGNS INCORPORATED HEREIN, AS AN INSTRUMENT OF PROFESSIONAL SERVICE, IS THE PROPERTY OF CH2M HILL AND IS NOT TO BE USED, IN WHOLE OR IN PART, FOR ANY OTHER PROJECT WITHOUT THE WRITTEN AUTHORIZATION OF CH2M HILL.
©CH2M HILL 2008. ALL RIGHTS RESERVED.

FILENAME: 01-G-0030_381571.dgn PLOT DATE: 12/17/2009 PLOT TIME: 8:04:17 AM

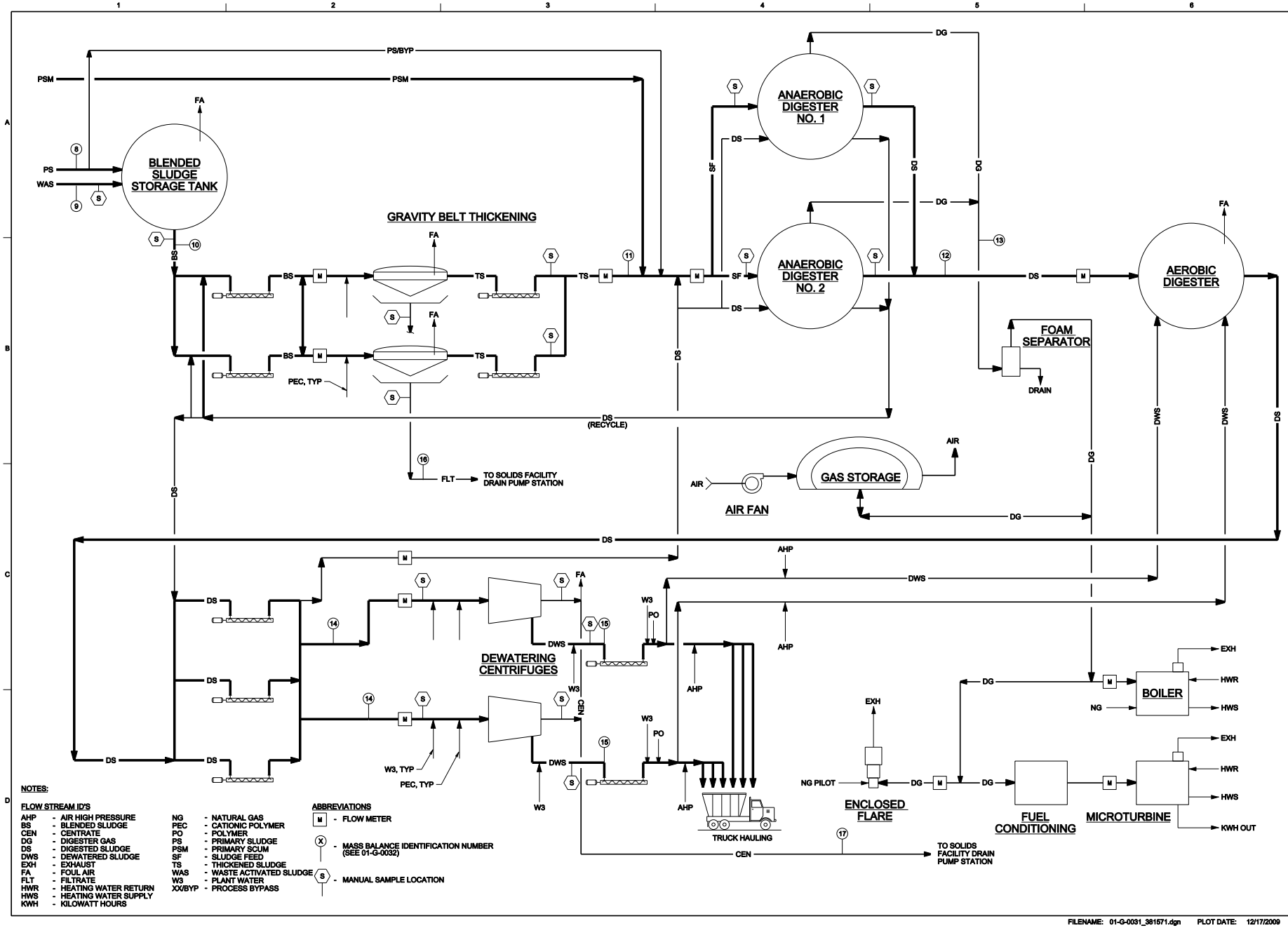

NOTES:

FLOW STREAM ID'S

AHP	- AIR HIGH PRESSURE	NG	- NATURAL GAS
BS	- BLENDED SLUDGE	PEC	- CATIONIC POLYMER
CEN	- CENTRATE	PO	- POLYMER
DG	- DIGESTER GAS	PS	- PRIMARY SLUDGE
DS	- DIGESTED SLUDGE	PSM	- PRIMARY SCUM
DWS	- DEWATERED SLUDGE	SF	- SLUDGE FEED
EXH	- EXHAUST	TS	- THICKENED SLUDGE
FA	- FOUL AIR	WAS	- WASTE ACTIVATED SLUDGE
FLT	- FILTRATE	W3	- PLANT WATER
HWR	- HEATING WATER RETURN	XX/BYP	- PROCESS BYPASS
HWS	- HEATING WATER SUPPLY		
KWH	- KILOWATT HOURS		

ABBREVIATIONS

M - FLOW METER

X - MASS BALANCE IDENTIFICATION NUMBER (SEE 01-G-0032)

S - MANUAL SAMPLE LOCATION

NO.	DATE	REVISION	BY	APVD

DSGN DJ CHADWICK | DR PM HAMLIN | CHK BA YOUKER | APVD DJ GRIGSBY

SPOKANE COUNTY
REGIONAL WATER RECLAMATION FACILITY

GENERAL
SOLIDS
PROCESS FLOW DIAGRAM

CH2MHILL

VERIFY SCALE
BAR IS ONE INCH ON ORIGINAL DRAWING.
0 1"

DATE	JANUARY 2010
PROJ	381571
DWG	01-G-0031
SHEET	29

REUSE OF DOCUMENTS: THIS DOCUMENT, AND THE IDEAS AND DESIGNS INCORPORATED HEREIN, AS AN INSTRUMENT OF PROFESSIONAL SERVICE, IS THE PROPERTY OF CH2M HILL AND IS NOT TO BE USED, IN WHOLE OR IN PART, FOR ANY OTHER PURPOSE WITHOUT THE WRITTEN AUTHORIZATION OF CH2M HILL.

©CH2M HILL 2006. ALL RIGHTS RESERVED.

FILENAME: 01-G-0031_381571.dgn PLOT DATE: 12/17/2009 PLOT TIME: 8:06:15 AM

Drawing A6-3. Final Site Layout Rendering

A7.1 INTRODUCTION

A wide range of solids processing alternatives were considered in the *2002 Wastewater Facilities Plan* and the *2003 Wastewater Facilities Plan Amendment.* A detailed discussion of the solids processing alternatives and biosolids management is presented in Chapter 7 of the *2002 Wastewater Facilities Plan*. Also, the *2006 Wastewater Facilities Plan Amendment* revised the solids quantity estimates to account for the increased solids that would be generated to meet the requirements of the Washington Department of Ecology's Dissolved Oxygen Total Maximum Daily Load (TMDL) and the June 30, 2006 *Foundational Concepts for the Spokane River TMDL Managed Implementation Plan.* The County's *Final Biosolids Management Plan* was submitted to Ecology in 2009, and the recommended alternative was Class B biosolids application onto agricultural land. However, the implementation method was not determined in that plan.

Additional revisions are required in this 2010 Facilities Plan Amendment to further adjust solids quantities and characteristics as a result of finalizing the recommended treatment process alternative. The discussion is organized to first update solids quantities, and then discuss the change in characteristics as a result of the final recommended alternative. The conclusion of the chapter summarizes the recommended solids process and biosolids management plan.

A7.2 PROJECTED SLUDGE QUANTITY AND CHARACTERISTICS

During wastewater treatment, several streams of residual materials will be produced as a result of the specific liquid treatment technologies selected for use:

- Grit and screenings removed during pretreatment
- Organic sludge produced by initial settling of the wastewater (primary sludge)
- Biological waste sludge resulting from biological treatment processes to remove nutrients and oxygen-consuming organics (secondary sludge)
- Chemical sludge produced by the chemical precipitation of phosphorus

Grit and screenings will be dewatered to an acceptable moisture content and sent to the Spokane Regional Solid Waste System for disposal. The other sludge streams will be processed as described in Section 6. This processed material is termed "biosolids."

Projected primary, secondary (biological) and chemical sludge production are shown in Table A6-3 (Mass Balance). Estimated biosolids nutrient concentrations are 0.2 percent TKN and 0.9 percent TP. During the low nitrogen permit season, which corresponds to summer months, nitrogen concentrations in the biosolids may be relatively low due to processing in the aerobic digester. This may result in low nitrogen to phosphorus ratios, potentially impacting the value of the biosolids product to end users.

A7.3 SUMMARY OF REGULATIONS

The *2002 Wastewater Facilities Plan* and the *Biosolids Management Plan* presented a summary of state and federal regulations pertaining to biosolids management. As noted in Chapter 2, the Washington State biosolids rule requires "significant removal of manufactured inerts" from biosolids before land application. The rule specifies that solids must be screened "through a bar screen with a maximum aperture of 3/8-inch," or inerts must be removed using another method approved by Ecology.

A7.5 RECOMMENDED BIOSOLIDS ALTERNATIVE

A wide range of biosolids management alternatives was identified in Chapter 7 of the *2002 Wastewater Facilities Plan* as summarized in Chapter 3 of the *2006 Wastewater Facilities Plan Amendment*. The recommended biosolids management program was presented in Chapter 9 of the *2002 Wastewater Facilities Plan* and recommended that all biosolids produced at the Spokane County Regional Water Reclamation Facility (SCRWRF) be stabilized through anaerobic digestion and dewatered to produce a Class B biosolids.

The County has elected to implement the SCRWRF as a design-build-operate (DBO) contract. Spokane County prepared a *Biosolids Management Plan* that was submitted to Ecology in 2009. The preferred biosolids management alternative is land application of Class B biosolids to agricultural land. The County is currently evaluating implementation alternatives including a partnership with the City of Spokane, a third-party contractor, and a County-operated and managed program. The County will apply for coverage under the Statewide General Permit for Biosolids Management once the implementation plan is determined.

Most biosolids application programs in Washington State have used dewatered Class B biosolids. The primary reasons for this are compatibility and value to crops, reduced hauling costs, ability to store the biosolids at the application site during the winter, and ease of application. Facility requirements are based on the process schematics of the recommended facility, as shown in Figure A6-1.

The solids processing associated with the recommended facility are outlined below.

- Grit and screenings would be disposed of via the Spokane Regional Solid Waste System.
- Primary and secondary sludges and seasonally-generated chemical sludge will be thickened in gravity belt thickeners.
- Thickened sludge will be anaerobically digested in mesophilic digesters (operated at 95°F).
- Solids storage will be provided in an aerobic digester/storage tank. This tank will serve as a "wide spot" between digestion and dewatering, and dewatering and truck load out, allowing shut down of the dewatering process over a weekend or for prolonged maintenance measures. The holding tank would also be used when icy roads or other conditions prevented haul of dewatered sludge to the application sites.

Dewatering will be provided by centrifuge, operating 8 hours per day, 5 days per week. A minimum cake solids concentration of 20 percent will be produced.

- Dewatered solids storage will be provided on-site in the haul trucks. Additional biosolids storage is provided with the aerobic digester upstream of the dewatering process as the dewatered solids pumps have the capability of pumping cake back to the aerobic digester.

Biogas produced in the digestion process will be recovered for use in heating the digesters and for electrical power generation.

Facility Requirements for Hauling Biosolids. It is assumed that biosolids haul to the application sites will be provided by 30 to 36 cubic yard capacity trucks, although the truck size, ownership, and operation is still being evaluated at this time. Based on the biosolids production associated with an 8 mgd plant flow, the estimated number of trips per week is shown in Table A7-3.

Table A7-3. Biosolids Haul Truck Trips for 8 mgd Plant (assuming 36 cubic yard capacity trucks)

Season	Trips per Week at Average Loading	Trips per Week at Maximum Month Loading
Summer	7	7.4
Winter	5.6	--

Agriculture Reuse Requirements. For agricultural reuse, dewatered biosolids would be land applied through cooperative arrangements with local farmers. Typically, a multi-year contract is negotiated between the utility and the farmer for this purpose. The land application program must be developed subject to approval by the Department of Ecology (Ecology). This program would include locating, investigating, and permitting sites to receive Class B biosolids, as well as developing an operational plan and a monitoring/reporting program. The application sites would need to meet regulatory requirements governing crop growth, harvesting, and public access. The County is currently evaluating the implementation of the land application program. Alternatives to a County-operated program include a partnership with the City of Spokane for land application and management, or a private contract operation. Options for the purchase of hauling and spreading equipment, and reporting responsibilities are also being evaluated.

Biosolids application rates are governed by nutrient and trace element loading rates. Typically, nitrogen loading is the controlling factor. Based on the City of Spokane's experience, an average annual loading rate of 3 dry tons per acre is assumed. This loading rate is based on a typical eastern Washington dryland crop and typical biosolids nitrogen concentrations. For an 8 mgd plant, this equates to approximately 700 acres per year. It is recommended that an additional 200 percent of the total required acreage as useable land is recommended to be under contract in a given year. Consequently, a total of 2,100 useable acres under contract is recommended. The SCRWRF biosolids nitrogen concentrations are projected to be lower than found in typical biosolids. If these projections are realized, the

loading rate could be higher than 3 dry tons per acre, thus reducing the required land area for biosolids application. However, a low nitrogen concentration may limit the attractiveness of the biosolids to local farmers.

Since dewatered biosolids cannot be land-applied year-round in eastern Washington, storage for dewatered solids during the winter months must be provided. Again, it is assumed that this practice would be modeled after the City of Spokane's RPWRF operation. That is, dewatered biosolids would be stored in bermed areas at the land application sites. This on-site stockpiling occurs after the ground has frozen. The biosolids are then stored in the bermed area until they can be applied after the winter.

Estimated Biosolids Management Operations Costs. Cost estimates for annual truck hauling of biosolids and land application were presented in the *Biosolids Management Plan*. Updated costs based on revised solids production estimates and cost assumptions for an 8 mgd treatment plant are summarized in Table A7-4. Discussions with the City of Spokane and private contractors, as well as preliminary investigation of locally available land application and storage sites have indicated that the County's biosolids management costs may be higher than anticipated in the *Biosolids Management Plan*.

Table A7-4. Estimated Annual Costs for Biosolids Hauling and Land Application[1]

Biosolids Management Activity	Estimated Annual Cost
Biosolids Truck Hauling[2]	$150,000
Biosolids Land Application[3]	$150,000
Total	$300,000

[1] Based on an average plant flow of 8 mgd

[2] Truck hauling costs approximately $15/wet ton.

[3] Estimated agricultural land application costs approximately $15/wet ton.

A9.1 INTRODUCTION

This chapter is presented as an amendment to the recommended plan that was provided in the *2006 Wastewater Facilities* Plan. Only sections of the chapter that have been changed due to the *Final TMDL* and to align with the DBO contract have been included. A wide range of alternatives were considered for meeting Spokane County's wastewater management requirements in the *December 2002 Wastewater Facilities Plan* and the *February 2003 Wastewater Facilities Plan Amendment.* Chapter 3 summarized the alternatives evaluation process used and identified the facilities conclusions previously reached in planning. Some revisions to the *2006 Wastewater Facilities Plan* are needed to meet the requirements of the February 2010 *Spokane River and Lake Spokane Dissolved Oxygen Total Maximum Daily Load – Water Quality Improvement Report (Final TMDL).* A detailed discussion of the revised wastewater treatment process and the biosolids management plan are presented in Chapters 6 and 7 of the *2006 Wastewater Facilities Plan Amendment* and updates are included in this 2010 Amendment to the Facilities Plan.

The plan provides a flexible, long-term management strategy for Spokane County, while identifying a phased implementation program to meet capacity and treatment requirements into the future.

The plan encompasses the following components:

- Controlling wastewater generation through use the use of a water conservation program.
- Maximizing use of the County's prior investment in the City of Spokane's Riverside Park Water Reclamation Facility (RPWRF).
- Building the new Spokane County Regional Water Reclamation Facility (SCRWRF) to serve growth and continued implementation of the septic tank elimination program.
- Producing highly-treated effluent meeting Class A reclaimed water standards and suitable for discharge to the Spokane River in accordance with the *Foundational Concepts* for the Spokane River TMDL Managed Implementation Plan.
- Preparing a detailed *Reclaimed Water Use Study* that will identify reuse customers, sites, water demands, and distribution system infrastructure required for potential implementation. Pursue effluent reuse opportunities that are affordable and which will augment the region's water resources.
- Beneficially reusing all biosolids produced at the SCRWRF.

Changes to the Recommended Plan as a result of the *Final TMDL* (February 2010) are as follows:

- The treatment process was updated throughout the chapter to reflect the selected liquid and solids processes

- Reference to the *Reclaimed Water Use Study* were updated to indicate that the report has been finalized
- Biosolids management details were updated to remain consistent with the plant design
- Expected performance information was updated based on the *Final TMDL* and the 100 percent design criteria of the new plant
- Costs were updated to reflect the DBO contract

A9.3 CONVEYANCE AND TREATMENT

A9.3.1 Overview

The recommended plan for treatment and conveyance is to fully use the County's current 10 mgd capacity allocation in the RPWRF and to build a new SCRWRF to accommodate additional wastewater flows generated in the County's service area. Figure A9-1 (Wastewater Flow Schematic Diagram of the Recommended Plan) presents a schematic diagram of this concept based on future flows. Figure A9-2 (Location of Major Facilities) shows the general location of major facilities that will be required.

At the City's RPWRF, the County owns 10 mgd of capacity based on average dry-weather flows. This capacity will be used to treat all wastewater generated in the County's North Spokane Service Area and a portion of the wastewater generated in the Spokane Valley.

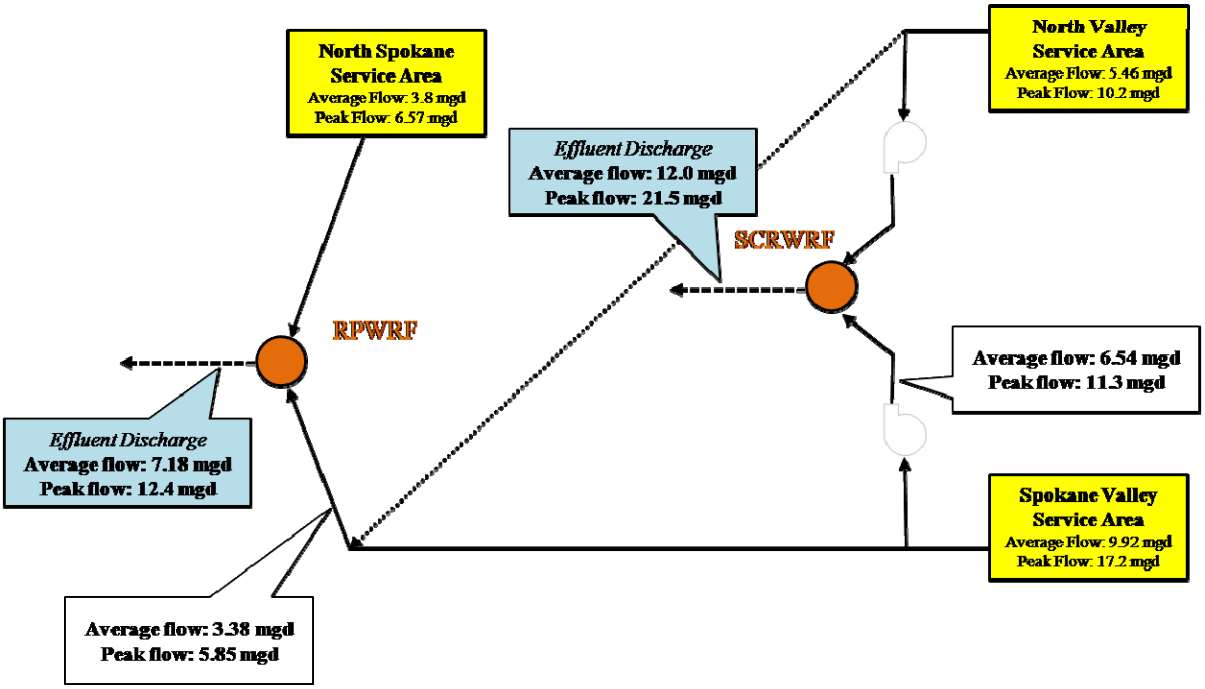

Figure A9-1. Wastewater Flow Schematic Diagram of the Recommended Plan (Distribution Based on Spokane County Future Projected 2030 Flows)

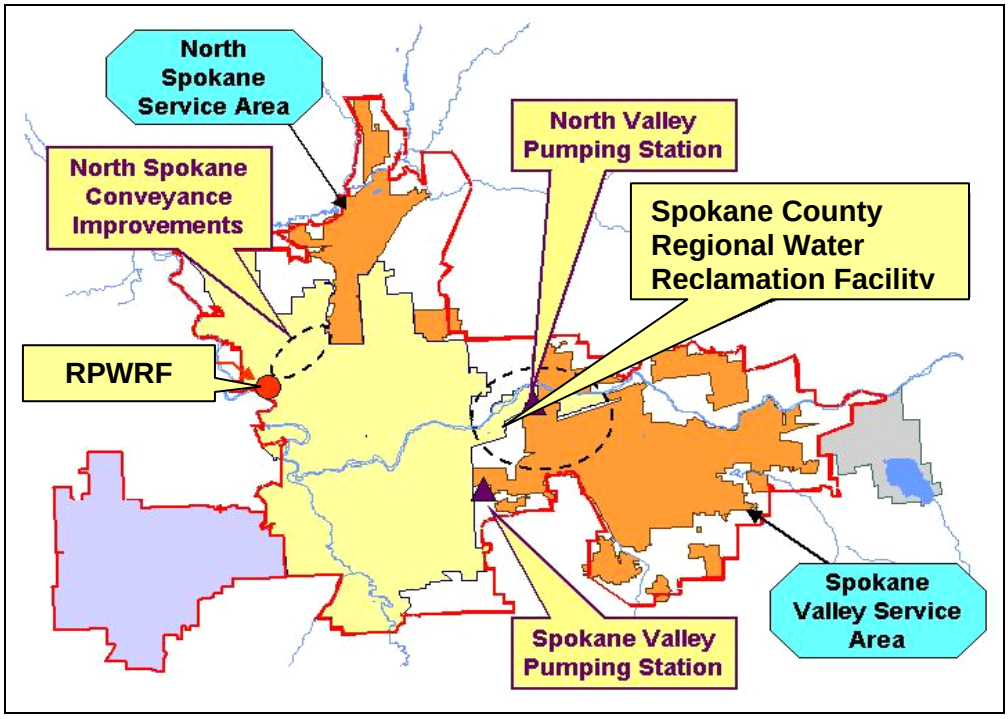

Figure A9-2. Locations of Major Facilities

A9.3.2 Conveyance

Several conveyance improvements will be needed to implement the recommended plan. Sewage flows from the North Valley Interceptor and from the Spokane Valley Interceptor will be pumped to the headworks at the SCRWRF. Collection system improvements located upstream of these facilities are addressed in the *Year 2001 Comprehensive Wastewater Management Plan for Spokane County*.

In considering conveyance requirements, the following design criteria were used:

- Gravity interceptors should be based on flow projections associated with a 50-year planning horizon.
- Force main requirements should also be based on 50-year flow projections, with consideration given to phased installation of parallel pipes to better accommodate near-term hydraulic requirements.
- Pumping station structures should be sized based on 50-year flow projections, but initial mechanical equipment should be sized and installed to meet 20-year flow projections.

North Spokane Service Area

Based on the City of Spokane's previous engineering analyses, it appears that the existing City interceptor system lacks capacity to handle projected peak flows from the County's North Spokane Service Area. Resolution of this capacity restriction will require installation of a parallel or replacement sewer along a section of the City's Hollywood Trunk Sewer from

the intersection of Rowan and Cannon to the intersection of Everett Avenue and "A" Street. The specific improvements to be implemented will be determined by the City based on their analysis of all capacity and condition issues in this area.

Spokane Valley Service Area

North Valley Interceptor (NVI) Pumping Station

The two potential alternative locations for the NVI pumping station were:

- An eastern location at Elizabeth Street and Marietta Avenue. This is the present location of the County's flow meter, and is where the NVI wastewater enters the City of Spokane wastewater system.
- A western location near Rebecca Street on the south side of the Spokane River, east of the Spokane Community College campus.

Based on beneficial pumping characteristics to the SCRWRF with a much shorter force main and lower dynamic pumping head, the western location was chosen as the preferred site of the NVI pumping station. In addition, this location also allows the routing of the force main to the treatment plant to be parallel to the outfall location east of the Spokane Community College campus, therefore, only one trenching operation for the pipe routes was required.

NVI Pump Station Forcemains Route

The force mains are routed parallel to the outfall from the treatment plant, south from the NVI Pump Station to Mission, and then east to N Myrtle Street where they turn south until they reach Trent Avenue, then west on Trent Avenue turning south on Julia Street. After crossing Boone, the force mains enter the SCRWRF site.

Spokane Valley Interceptor (SVI) Pumping Station

The SVI runs in Fourth Avenue parallel to I-90 on the south side and discharges into the City of Spokane wastewater system at Havana Street. The County flow-metering station is currently located immediately east of Havana. The location where flows would be diverted to the SCRWRF is in this vicinity. However, within the past two years, an interim pumping station was constructed at Havana and Sprague Avenue to convey the Chronicle sewer basin into the interceptor system. It was anticipated that the location of the SVI pumping station would allow the County to eliminate the interim pumping station. Therefore, alternative pumping station sites were considered along Fourth Avenue, along Havana Street, and along Sprague Avenue. A gravity sewer exists to convey the Chronicle basin flows, and to convey the SVI flows to the pumping station site, based upon the location selected for the SVI pumping station.

In addition, it is known that the Washington State Department of Transportation is in the early planning stages for the expansion of the I-90 Freeway, and for the connection of the future North-South Freeway. Furthermore, the area on the south side of I-90 is tentatively identified for major widening in the vicinity of Havana. In selecting a pumping station site, the County strived to avoid future conflicts with these potential projects.

SVI Pump Station Forcemains Route

The force mains route north along S Myrtle St until Sprague Avenue, then west on Sprague Avenue turning north on Julia Street until turning east on Olive Avenue for one block. They then continue north through private property easements until reaching the south edge of the SCRWRF site.

A9.4 TREATMENT

The recommended plan combines treatment at the City's RPWRF to fully use the County's current 10 mgd capacity allocation and construction of a new SCRWRF located at the Stockyards site.

A9.4.1 City of Spokane Riverside Park Water Reclamation Facility (RPWRF)

Spokane County will maintain its 10-mgd capacity allocation in the RPWRF. It is anticipated that the City of Spokane will implement additional treatment improvements to meet effluent quality requirements outlined in the *Final TMDL.*

A9.4.2 New Spokane County Regional Water Reclamation Facility

Following a detailed analysis of potential water reclamation facility sites, Spokane County selected the former Stockyards site as the preferred location for the SCRWRF and purchased the site.

Identification of Treatment Processes

Based on anticipated effluent quality requirements for a new discharge to the Spokane River, a recommended treatment process was identified following the *2006 Wastewater Treatment Facilities Amendment.* A DBO contractor has been selected and capital and operating costs have been updated to reflect the contract. A schematic diagram of the system is shown in Figure 9-3 (Selected Treatment Process for SCRWRF) and major unit processes are described below. Details of the selected treatment system are provided in the 2010 Amendment to Chapter 6 – Treatment Systems.

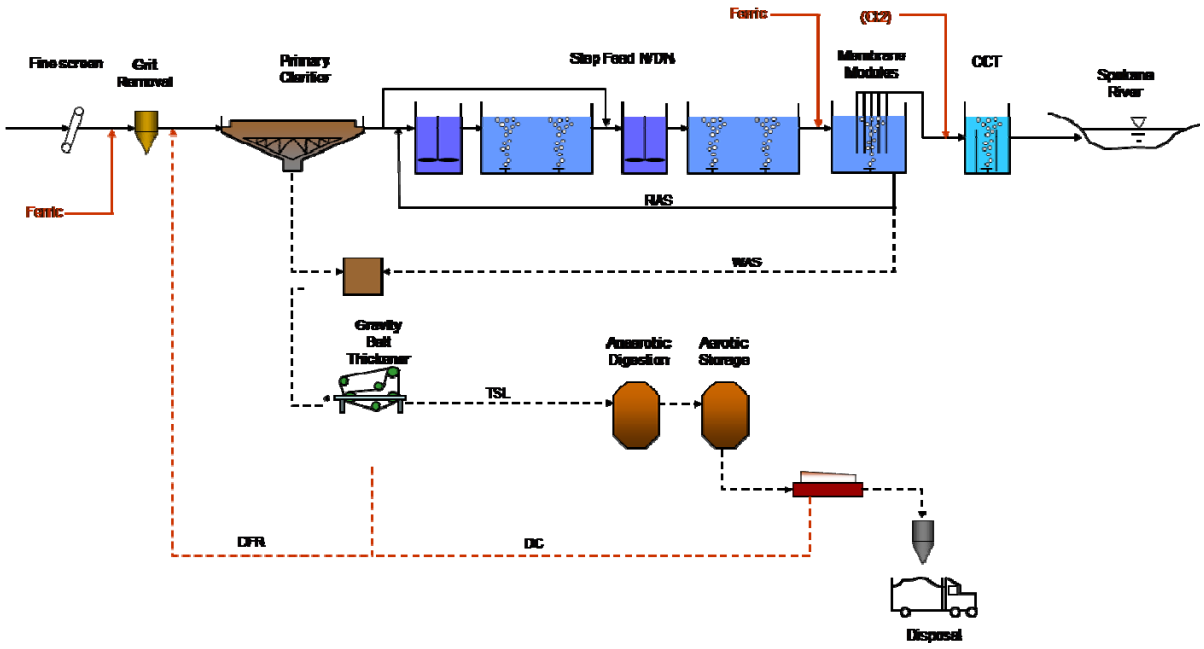

Figure A9-3. Selected Treatment Process for the Spokane County Water Reclamation Facility (SCRWRF)

Liquid Treatment Processes

Septage Receiving. A receiving station will be installed to accept septage from commercial haulers.

Pretreatment. Fine screening and grit removal will be provided. Two bandscreens with 2mm openings and 13.8 mgd capacity each have been selected.

Primary Treatment. Two primary clarifiers (65 foot diameter) will be provided.

Biological Treatment and Advanced Filtration. A step feed nitrification/denitrification membrane bioreactor system with chemical phosphorus removal has been selected for biological treatment. Chemical addition (ferric) will occur upstream of grit removal and upstream of the membrane tank influent. Disinfection is provided by chlorination using sodium hypochlorite. The system will be capable of meeting Class A reclaimed water standards for the entire plant flow. The process is designed to meet the Class A reclaimed water requirements for total nitrogen requirements permitting effluent reuse in urban irrigation, industrial reuse, and wetlands restoration. All equipment associated with mixed-liquor pumping, permeate pumping, waste-activated sludge (WAS) pumping, secondary scum pumping, process air supply, and membrane scour air supply will be provided within the overall MBR facility.

Disinfection and Dechlorination. Disinfection will be provided using a liquid sodium hypochlorite system followed by a liquid sodium bisulfate dechlorination facility.

Reclaimed Water Pumping. The County will implement a reclaimed water program, providing Class A reclaimed water for use in urban irrigation, industrial reuse, and wetlands restoration. Initially, this program will utilize reclaimed water for irrigation on the water

reclamation facility site. Consequently, the site layout and hydraulic profile includes a reclaimed water pumping station. The primary disinfectant for the reclaimed water will be liquid sodium hypochlorite capable of maintaining a disinfectant residual in the reclaimed water distribution system.

Chemical Feed Systems. A chemical feed and storage building will be constructed to house the following feed systems: ferric, sodium hypochlorite, citric acid, polymer, methanol, supplemental alkalinity addition (if required), and other chemical systems necessary to meet effluent phosphorus discharger limits and maintain the membrane system and other plant systems.

Solids Handling Processes

Grit and Screenings Handling. Grit will be washed, classified and hauled to a landfill. Screenings will be washed, compacted and hauled to the municipal refuse incinerator.

Sludge Thickening. Primary and secondary sludges will be co-thickened by gravity belt thickeners (GBTs) after being mixed together in a blended sludge storage tank.

Sludge Stabilization. Single-stage, mesophilic digestion has been assumed for sludge stabilization. The anaerobically-digested solids can also be aerobically digested.

Digested Sludge Storage. Five days of liquid sludge storage will be provided in an aerobic digester/storage tank for periods when icy roads prevent hauling of biosolids from the plant site.

Sludge Dewatering. Centrifuges will be used for dewatering the digested solids.

Dewatered Solids Pumping. A truck load-out facility will be provided, with dewatered solids pumps providing the ability to fill trucks at multiple drop points.

Aesthetics

The SCRWRF will be designed with pleasing aesthetics that will complement or enhance the surrounding neighborhood in the vicinity of the former Stockyards site. It is anticipated that the finished plant will resemble an attractive commercial development in a similar manner to the results achieved in Vancouver and Edmonds, Washington.

Close attention will be paid to odor control. All treatment processes that are generators of noticeable odors will be covered and ventilated, with the foul air sent to state-of-the-art odor scrubbing systems.

Similar attention will be paid to noise and lighting control. All equipment with significant noise generation will be enclosed within buildings or shrouded in sound attenuation structures. Plant lighting systems will be designed to minimize off-site impacts.

The facility site will be landscaped to soften the appearance of the facilities and to provide an attractive buffer between it and adjoining properties. More formal and extensive landscaping will be implemented around the plant entrance of Freya Street. The overall landscaping scheme and choice of materials will be consistent with other attractive industrial campuses in the Spokane area.

A9.4.3 Effluent Outfall to the Spokane River

The effluent discharge location for the SCRWRF is between Rebecca and Havana Streets, located at River Mile 78.68 just below the outlet from the Upriver Dam. The County prefers this location based on the evaluation of technical, cost and water quality considerations as part of a *2002 Supplemental Environmental Impact Statement (SEIS)*. This outfall location is the most cost effective option and will be easier to construct with fewer special crossings and less construction restoration of the City right-of-way. The northerly 400 feet will be constructed on property owned by Spokane County.

A9.5 MANAGEMENT OF RECLAIMED WATER

Spokane County is dedicated to the effective management of the region's water resources and is an active participant in regional water resources planning. In looking toward the future, the County sees beneficial use of reclaimed water as an increasingly important component of the region's water supply. The SCRWRF will produce water which meets State of Washington Class A reclaimed water quality standards. This will satisfy the mandatory "target pursuit action" related to reuse in the *Final TMDL*. Spokane County completed a detailed *Reclaimed Water Use Study* in 2009 that identified reclaimed water customers, sites, water demands, and distribution system infrastructure required for potential implementation. This will satisfy the elective "target pursuit action" available to the County for reuse. Spokane County will consider the cost-effectiveness of reuse opportunities in conjunction with the potential for phosphorus loading reduction when selecting reuse projects for implementation.

A9.6 BIOSOLIDS MANAGEMENT

All biosolids produced at the RPWRF and the new SCRWRF will be stabilized through anaerobic digestion and dewatered to produce a Class B biosolids. The material will be applied to agricultural land. This will beneficially recycle nutrients and organic material to the land. At RPWRF, this represents a continuation of current practice. At the SCRWRF, a biosolids management program is being developed and implemented. Spokane County completed a Biosolids Management Plan that was submitted to Ecology in 2009. Implementation of the program is ongoing, with consideration of a partnership with the City of Spokane for land application or the use of a private contractor for hauling and land application.

At the SCRWRF, flexibility will be provided to convert the facility to Class A biosolids production in the future. This conversion to Class A biosolids may be driven by changing regulatory requirements, need for greater diversity in reuse options, or public desire for a compost product. The technical options for future conversion to Class A biosolids include temperature-phased digestion, pre-pasteurization, and composting. The first options could be implemented at the SCRWRF site, whereas composting would likely require a separate remote site.

A9.7 COST ESTIMATE

A9.7.1 Capital

The SCRWRF will be constructed in two phases to meet projected capacity requirements. Phase 1 will be operational by 2012 and will provide annual average capacity of 8.0 mgd and maximum-month capacity of 8.5 mgd. Phase 2 will increase annual average capacity to 12.0 mgd and the maximum-month capacity to 12.6 mgd. The timing of Phase 2 expansion will depend upon the rate of growth experienced in the service area. Table 9-1 of the *2006 Wastewater Facilities Plan Amendment* (Summary of Capital Costs of SCRWRF) presented estimated capital costs for the Phase 1 facility. Estimated capital costs were escalated to the projected mid-point of construction in January 2010 based upon a straight line extrapolation of historical Northwest construction cost indices. It should be noted that a number of the facilities planned for Phase 1 are anticipated to provide sufficient capacity for Phase 2 as well. These include the septage receiving station, the headworks, the second-stage fine screens, the digester control building, the sludge dewatering and biosolids loadout facilities, the odor control system, and the administration, laboratory and maintenance buildings.

Water Reclamation Facility Site Development Costs

Additional site development costs associated with the Stockyards site include clearing to remove existing pavement or structures and the cost to remediate contaminated soils. Spokane County has spent approximately $400,000 for site remediation consulting and contracting.

In December 2004, Spokane County's consultant, SLR International Inc., presented a Phase 1/Phase 2 Environmental Site Assessment report that identified contamination in: a) near-surface native soils; 2) sediments accumulated in on-site manholes and vault structures; and 3) imported fill materials. The contaminants included polynuclear aromatic hydrocarbons (PAHs), lead, cadmium, and total petroleum hydrocarbons (TPH - gasoline, diesel, and heavy oil). Based on the contaminants detected at the Site, Spokane County contracted with LFR, Inc. (former SLR International staff) to conduct additional site characterization and to develop technical specifications to remediate the property. Spokane County contacted the Washington State Department of Ecology (Ecology) regarding the detected contamination, and initiated site cleanup efforts via the Ecology Voluntary Cleanup Program. In November 2006, Spokane County contracted with NRC Environmental Inc. to clean up contaminated materials at the site, including demolition and disposal of on-site structures (garage and well house).

The clean up project also included abandonment of an existing water supply well at the site. A water sample was collected from the water supply well prior to abandonment. The water sample was analyzed for the contaminants of concern noted above, as well as nitrate. No contaminants were detected in the water sample.

The clean up involved excavation and off site disposal of contaminated soils discovered during the environmental site assessments, followed by collection of soil samples in the remediated areas to confirm the removal of the contaminants. To reduce the volume of contaminated materials for disposal, some of the contaminated soil was screened on-site to remove the larger, uncontaminated materials (particles/debris >2-inches). A total of

approximately 2,500 tons of contaminated soil and 1,500 tons of uncontaminated soil, rock and brick debris were hauled off-site for disposal. All materials were disposed at lined, disposal facilities permitted to legally accept the waste streams, including the Graham Road Regional Disposal and Recycling Facility in Medical Lake, Washington and the Finley Buttes Landfill in Boardman, Oregon. As noted above, soil samples were collected from the excavated areas following clean up efforts. None of the soil samples contained contaminants of concern above applicable cleanup levels, thus confirming that the known contaminated soils were effectively removed from the site. Ecology has since issued a "No Further Action" letter.

Outfall Costs

Estimated outfall costs were summarized in Table 9-2 (Capital Costs of Outfall Alternatives) of the *2006 Wastewater Facilities Plan* for the preferred location east of the Spokane Community College campus.

Other Program Costs

Cost for other program elements such as water conservation activities, effluent management components and the cost to upgrade Spokane County's share of the Spokane RPWRF have not been updated as part of this Facilities Plan Amendment.

Property Costs

Spokane County has purchase the Stockyards site as the location for the Spokane County Water Reclamation Facility. Property costs for the site were approximately $3,500,000.

Total Capital Costs

Table A9-3(Summary of Capital Costs of Recommended Plan) summarizes the estimated capital costs for the recommended program. The presented costs are based on the bid price and the DBO contract. The costs presented in Table 9-1 and 9-2 of the *2006 Wastewater Facilities Plan Amendment* have been superseded by what is now under contract for the County. Costs for the conveyance systems and treatment have been updated in Table A9-3 to reflect current bid prices and construction contracts.

Table A9-3. Summary of Estimated Capital Costs of Spokane County Regional Water Reclamation Facility

Program Elements	Estimated Total Cost, $1,000
Water Conservation	
Water Conservation – Public Education	$250
Water Conservation – Physical Devices	$4,000
Revised Design and Construction Standards (Leadership in Energy and Environmental Design (LEED)	$50
Subtotal	***$4,300***
Conveyance	
Spokane Valley Pump Station	$4,079
Spokane Valley Force Main	$4,779
North Valley Pump Station	$5,208
North Valley Force Main and SCRWRF Outfall	$4,079
Subtotal	***$18,145***[a]
Treatment	
SCRWRF – Site Remediation	$400
SCRWRF – DBO Honorarium	$400
SCRWRF – Phase 1 (8 mgd)	$138,247
Subtotal	***$139,048***[b]
Effluent Reclamation and Reuse	
SCRWRF—Facility Site Irrigation	$300
Water Reclamation and Reuse Plan	$500
Water Reclamation Implementation[2]	$10,000
Reuse Conveyance (To be developed in Water Reclamation and Reuse Plan)	TBD
Subtotal	***$10,800***
Land Acquisition	
Spokane Valley Pump Station	$200
North Valley Pump Station	$200
SCRWRF[3]	$3,500
Subtotal	***$3,900***
Total Program	**$176,193**

[1]Costs are uninflated values presented in December 2006 dollars (ENR-CCI 7911)
[2]Cost shown is an allowance for future activities yet to be determined.
[3]Costs previously expended.
[a]Updated conveyance costs are based on the bid prices (March 2010)
[b]Construction cost based on DBO Contractor contract for fixed price design/build cost subject to adjustments for material price indices.

A9.7.2 Estimated Operating and Maintenance Costs

Estimated operating and maintenance (O&M) costs for the SCRWRF are presented in Table A9-4 (Summary of Projected Operation and Maintenance Costs). These estimates are based on an average plant flow rate of 8.0 mgd. In developing the O&M costs, the following unit costs were used:

Table A9-4. Summary of Projected Operation and Maintenance Costs for SCRWRF

Item	Cost
Total Annual DBO Operating fee	**$4,850,000[a]**
Cost per MG treated	**$1,662**

[a]Annual operating costs based on DBO Contractor contract for Annual reset Group 1 for baseline levels of biological oxygen demand (BOD5), total suspended solids (TSS), and total nitrogen (TN) and phosphorus (P) parameters.

Estimated operating and maintenance (O&M) costs for the NVI and SVI pumping stations are presented in Table A9-5 (Summary of Projected Operation and Maintenance Costs for NVI and SVI Pumping Stations).

Table A9-5. Summary of Projected Operation and Maintenance Costs for NVI and SVI Pumping Stations

Item	Cost
Electrical Power	$509,496
Chemicals	$6,880
Labor (Operations and Maintenance)	$69,888
Materials	$210,000
Lab Services	$6,747
General Overhead	$28,736
Total	**$831,747**
Cost per MG treated	**$285**

A9.8 EXPECTED PERFORMANCE AND WATER QUALITY ISSUES

Projected Effluent Performance

The *Final TMDL* established stringent limits for BOD, ammonia-nitrogen and phosphorus. The more stringent limits formed the primary basis for the County's proposal to use membrane technology. The expectation is that the membrane process will meet the anticipated initial NPDES permit effluent limits in Table A2-8.

A11.1 INTRODUCTION

The February 2010 *Spokane River and Lake Spokane Dissolved Oxygen TMDL Water Quality Improvement Report (Final TMDL)* describes the wasteload allocations for dischargers to meet the TMDL requirements. The wasteload allocation for Spokane County is based upon an annual average influent flow rate of 8 mgd and sets a seasonal average concentration of 0.042 mg/L effluent phosphorus concentration (2.80 lbs/day phosphorus). The wasteload allocation is described in Table 5 of the *Final TMDL*. The *Final TMDL* document acknowledges the limited capability of reliable 8 mgd treatment technology to consistently achieve 0.042 mg/L effluent phosphorus and authorizes the County to develop a "delta elimination plan" to identify target pursuit actions to bridge the gap between the 0.042 mg/L target and the treatment technology capabilities.

Spokane County has prepared a delta elimination plan (Phosphorus Management Plan) for approval by the Washington State Department of Ecology (Ecology), along with a schedule for other phosphorus removal actions. Potential other phosphorus removal actions include conservation, reclaimed water use, source control through support of regional phosphorus reduction efforts (such as limiting use of fertilizers and dishwasher detergents which contain phosphorus), and supporting regional non-point source control efforts yet to be established. The Phosphorus Management Plan, in combination with the phosphorus reduction from treatment technology, provides reasonable assurance of meeting Spokane County's phosphorus loading target when the new Spokane County Regional Water Reclamation Facility (SCRWRF) begins operation. This Phosphorus Management Plan, which was originally prepared for the *2006 Wastewater Facilities Plan Amendment* and has been updated for this 2010 Facilities Plan Amendment, is Spokane County's Delta Elimination Plan for the purposes of meeting the requirements of the *Final TMDL*. This Phosphorus Management Plan defines the phosphorus management actions for which Spokane County has committed to implement to provide reasonable assurance of meeting targets.

Changes to the Phosphorus Management Plan as a result of the *Final TMDL* are as follows:

- Estimated phosphorus loading to the Spokane River has been updated throughout
- A summary of the preliminary results from the bioassay studies conducted by the University of Washington have been included in the Bio-Available Phosphorus section
- An update on the Regional Nonpoint Source Reduction Program progress has been included

A11.2 TARGET PURSUIT ACTIONS

Foundational Concepts defines several "*target pursuit actions*" which include a combination of both treatment technology and "delta" elimination efforts to reduce Spokane County's phosphorus load to the Spokane River. These target pursuit actions include both required and elective (available) actions. For a complete description of each target pursuit action, see the *Foundational Concepts* document in Appendix A of the *2006 Wastewater Facilities Plan Amendment*.

Several of the required and available target pursuit actions defined in the *Foundational Concepts* document are activities to be led by Ecology. Other target pursuit actions can be led by Spokane County directly. The target pursuit actions that directly reduce the phosphorus loading to the Spokane River are included in this Spokane County Phosphorus Management Plan. These actions include water conservation, production of Class A reclaimed water and subsequent use, regional phosphorus reduction programs, source control programs, regional non-point source reduction programs, and septic tank elimination.

Table A11-1 lists all of the target pursuit actions identified in *Foundational Concepts* and categorizes each target pursuit action as an action being led by Spokane County, an action in which Spokane County plans to participate, or an action to be led by Ecology. Also, not all of the target pursuit actions defined in *Foundational Concepts* will directly result in "delta" elimination. For example, an "expeditious decision" by Ecology of an "Engineering Report" by Spokane County will not directly result in phosphorus load reduction. For this reason, Table A11-1 also identifies which actions Spokane County may consider for possible actions for "delta" elimination. These actions are briefly described in this chapter.

Table A11-1. Spokane County "*Target Pursuit Actions*" from the "*Foundational Concepts for the Spokane River TMDL Managed Implementation Plan*"

Target Pursuit Action	Ecology Led Pursuit Action	Spokane County Participating Pursuit Action	Spokane County Led Pursuit Action	Actions for "Delta" Elimination
Required Action[1]				
Technology Selection Protocol			X	
"Delta" Elimination Plan			X	
Expeditious Decision	X			
Engineering Report			X	
Interim Limits	X			
Final Limits	X			
Investment Stability	X			
Conservation			X	X
Class A Reclaimed Water Production			X	X
Available Actions[2]				
Reclaimed Water			X	X
Regional Phosphorus Reduction Programs		X		X
Bio-Available Phosphorus		X		
Source Control Programs			X	X
Regional Non-Point Source Reduction Programs	X	X		X
Septic Tank Elimination Program			X	X

[1] *Foundational Concepts* defines "Required Actions" as target pursuit actions for each NPDES permit holder with a "Delta".

[2] *Foundational Concepts defines* "Available Actions" that are not required of every NPDES permit holder with a "Delta" and notes that the regional non-point source reduction program needs to have sufficient participation to achieve the TMDL-related phosphorus reduction.

A11.2.1 Septic Tank Elimination Program (STEP)

Spokane County Division of Utilities records show that sewer service has been provided to approximately 7,186 onsite sewage disposal systems within the Spokane County service area from 2001 through 2005, and the Utilities Division estimates that service will be provided to 800 onsite sewage disposal systems per year up to the year 2011. Once the SCRWRF is completed, sewer service will be provided to the remaining systems within the service area between 2011 and 2015. The final year of sewer construction in the STEP is projected in 2011.

The total annual phosphorus load reduction to the Spokane River from the Spokane County Septic Tank Elimination Program was estimated in a technical memorandum in Appendix B of the *2006 Wastewater Facilities Plan Amendment*. The range in annual total phosphorus load reduction to the Spokane River is summarized in Table A 11-2. The TMDL load allocation was based on the year 2001, so the annual total phosphorus load reduction resulting from providing sewer service to onsite sewage disposal systems begins in 2001. By removing septic systems between 2001 and 2005, the estimated phosphorus load reduction to the Spokane River is currently between 3.8 lbs/day and 6.3 lbs/day. The lower range of annual total phosphorus load reduction to the Spokane River in 2015 is estimated to be 4,440 lbs (12.2 lbs/day). The upper range of annual total phosphorus load reduction to the Spokane River in 2015 is estimated to be 7,400 lbs (20.3 lbs/day).

Table A11-2. Phosphorus Load Reduction to the Spokane River Resulting from Sewer Connections of Septic Systems

Year	Estimated Number of Systems with Breakthrough	Loading to Ground Water (lbs/day)	Loading to Surface Water, lbs/day	
			Retention Factor 0.5	Retention Factor 0.7
2001-2005	630[a]	12.6	6.3	3.8
2005-2015[b]	1,461	28.0	14.0	8.4
TOTAL	2,091	40.6	20.3	12.2

[a] Based on Spokane County records for number of existing structures provided sewer service between 2001 and 2005.
[b] Future P loading to be removed from the Spokane River system once sewer service is provided to existing onsite sewage disposal systems.

A11.2.2 Treatment Technology

The sewage in Spokane County's wastewater collection system will be conveyed to one of two wastewater treatment facilities. Sewage flows from the North Spokane Interceptor are conveyed to the Riverside Park Water Reclamation Facility. Spokane County plans to operate the SCRWRF at 8 mgd annual average flow and convey only flows from the Spokane Valley service area to it. As flows increase in the North Valley Interceptor and Spokane Valley Interceptor above 8 mgd annual average flow, greater flow will be conveyed to the Riverside Park Water Reclamation Facility, up to a maximum of 10 mgd.

Future advances in treatment technology will increase reductions in phosphorus discharged from the SCRWRF. If effluent phosphorus is reduced from 0.050 mg/L to 0.042 mg/L for an 8 mgd annual average flow, the reduction in effluent phosphorus would amount to 0.54

lbs/day. This phosphorus load is entered into Table A11-9 to illustrate the potential for reduction from advances in treatment technology.

If necessary, Spokane County could operate the SCRWRF at a reduced flow rate (less than 8 mgd annual average flow) and continue to convey up to 10 mgd of raw wastewater to the City of Spokane Riverside Park Water Reclamation Facility. Operation of the SCRWRF at less than the design capacity of 8 mgd, and perhaps as low as 6.7 mgd, may be considered if phosphorus reduction credits to satisfy the "delta" were not available when the facility is commissioned, or not considered to be concurrent with the provision of sewer service.

Spokane County may need to maximize flow to the RPWRF if delta elimination actions are not approved and Spokane County cannot meet the target wasteload allocations in the *Final TMDL*. The target phosphorus load for Spokane County in 2027 is 2.80 lbs/day. The new SCRWRF could be operated at 6.7 mgd and effluent phosphorus concentration of 0.050 mg/L for a phosphorus load of 2.80 lbs/day. The remaining flow would continue to be conveyed to the RPWRF. If Spokane County's delta elimination actions are not approved, Spokane County would be restricted to operating the new, state-of-the-art wastewater reclamation facility at a reduced flow and water quality in the Spokane River would not benefit from the high level of advanced treatment in the County's new treatment facility.

A11.2.3 Other Target Pursuit Actions

The delta elimination that results from the County's Septic Tank Elimination Program alone will provide Spokane County with a surplus of phosphorus reduction credits. Spokane County has other options available to develop additional phosphorus reduction credits. These other actions include water conservation, water reclamation and reuse, regional phosphorus reduction programs with other agencies, quantification of bio-available phosphorus, source control programs, regional non-point source reduction programs, and stormwater management programs.

Water Conservation

Water conservation has environmental benefits that extend beyond phosphorus load reduction to the Spokane River. By minimizing withdrawals from the aquifer, more water is available for other beneficial uses. Less energy is required for supplying water for consumptive uses because less water is in demand. Also, less energy is required for treating wastewater after it has been used and conveyed to the County's wastewater system.

However, water conservation may have a few negative impacts on wastewater management. Conservation will decrease the wastewater quantity, but may not reduce the mass of wastewater solids and organics entering the treatment plant. As a consequence, wastewater biochemical oxygen demand and total suspended solids concentrations may increase. Conveyance transport time may be increased. The higher strength and extended transport time may work to increase the potential for odor and corrosion in the collection system.

Nonetheless, water conservation will reduce flow to the SCRWRF, which in turn will reduce the flow to the Spokane River. If the effluent phosphorus concentrations remain constant, the P loading to the river will be reduced.

Plumbing code enforcement may reduce sewage flows by over 10 percent in 20 years, related to replacement of toilets and showerheads. Table A11-3 is an estimate of the total phosphorus reduction, starting in 2010, if plumbing code enforcement reduces wastewater generated by 10 percent over 20 years. This is based on total Spokane County wastewater flows (including the North Spokane area) from 8.9 mgd in 2010 to 19.2 mgd in 2030 and an effluent phosphorus concentration of 0.05 mg/L.

Table A11-3. Phosphorus Load Reduction through Plumbing Code Enforcement

Year	Total Average Annual Wastewater Flow, mgd[1]	Percent Reduction through Plumbing Code Enforcement	Phosphorus Load Reduction, lbs/day
2010	8.9	0%	0
2015	11.2	2.5%	0.117
2020	13.9	5.0%	0.290
2025	16.5	7.5%	0.516
2030	19.2	10.0%	0.801

[1] Assumes total Spokane County wastewater flow from both North Spokane service area and SCRWRF service area.

New commercial buildings, including schools, industrial offices, hotels, offices, fire stations, and hospitals, may provide some of the greatest opportunity for implementing water conservation measures. By requiring Leadership in Energy and Environmental Design (LEED) water conservation measures to be installed in every new non-residential building, wastewater flow may be reduced by approximately 28 percent in these buildings versus conventional building construction.

Water Reclamation and Reuse

In 2007, Spokane County initiated the development of a detailed Reclaimed Water Use Study which describes opportunities for reclaimed water use and the associated phosphorus load reduction resulting from reuse. The phosphorus load reduction from reuse will contribute to Spokane County's overall "delta" elimination plan.

The SCRWRF site is one location where reclaimed water will be used for outdoor irrigation. The Effluent End Use Alternatives chapter of the *2002 Wastewater Facilities Plan* described several potential locations for urban irrigation using reclaimed water. These potential locations have been screened in the *Spokane County Reclaimed Water Use Study (June 2009)* to include Plantes Ferry Park, the Spokane County Fair and Expo Center, and the Painted Hills Golf Course. Spokane County is also discussing irrigation of the Esmerelda Golf Course with the City of Spokane given its relatively close proximity to the SCRWRF. Table A11-4 shows these potential locations for irrigation with reclaimed water, the irrigation water requirement, and the resulting phosphorus load reduction to the Spokane River.

Table A11-4. Monthly Water Demand and Phosphorus Load Reduction through Irrigation with Reclaimed Water

Month	Esmerelda Golf Course (162 acres)[1]		Painted Hills Golf Course (87 acres)[1]		Plantes Ferry Park (90 acres)[1]		Spokane County Fair and Expo Center (15 acres)[1]		SCRWRF Site (9 acres)[1]		Total (363 acres)	
	Q[2]	P[3]	Q	P	Q	P	Q	P	Q	P		
May (15-31)	263,000	0.109	146,000	0.061	146,000	0.061	24,000	0.010	14,600	0.006	593,000	0.247
June	847,000	0.353	471,000	0.196	471,000	0.196	78,000	0.033	47,000	0.020	1,915,000	0.798
July	1,260,000	0.525	700,000	0.292	700,000	0.292	117,000	0.049	70,000	0.029	2,847,000	1.187
August	1,009,000	0.421	560,000	0.234	560,000	0.234	93,000	0.039	56,000	0.023	2,279,000	0.950
September	638,000	0.266	354,000	0.148	354,000	0.148	59,000	0.025	35,400	0.015	1,441,000	0.601
October (1-10)	157,000	0.066	87,000	0.036	87,000	0.036	15,000	0.006	8,700	0.004	355,000	0.148
SEASONAL AVERAGE	815,000	0.340	453,000	0.189	453,000	0.189	75,000	0.031	45,300	0.019	1,842,000	0.768

[1] Areas are irrigated acres.
[2] Q is the average monthly irrigation demand, stated in gpd.
[3] P is the resulting phosphorus load removed from the Spokane River based on the average irrigation demand and 0.05 mg/L phosphorus concentration, stated in pounds per day.

An estimated phosphorus reduction to the Spokane River resulting from an increase in irrigation with reclaimed water in future years is presented in Table A11-5. This assumes that 100 acres of irrigable area could be added to the Spokane County reclaimed water use program every year and the total irrigation demand for a 148 day season is 28.22 inches (518,000 gpd/100 acres). The flow for reclaimed water use reduces the flow to the Spokane River discharge, and the phosphorus loading to the Spokane River is reduced by 0.05 mg/L multiplied by the rate of water reuse.

Table A11-5. Phosphorus Load Reduction through Reclaimed Water Irrigation

Year	Irrigable Acres for Reclaimed Water Use, acres	Average Flow for Reclaimed Water Irrigation, mgd	Phosphorus Load Reduction, lbs/day
2010[1]	363	1.84	0.768
2015	500	2.59	1.08
2020	1,000	5.18	2.16
2025	1,500	7.77	3.24
2030	2,000	10.36	4.32

[1] Assumes initially available reuse sites are identified in Table A11-4 Esmerelda Golf Course, Painted Hills Golf Course, Plantes Ferry Park, Fair and Expo, and the SCRWRF site.

Regional Phosphorus Reduction Programs

This target pursuit action was included in *Foundational Concepts* to provide for a means among multiple permit holders to collaborate on regional phosphorus reduction activities accomplished jointly. Possible phosphorus reduction activities could include reclaimed water use with effluent combined from more than one discharger; reuse of municipal effluent for non-potable, industrial activities; and partnerships in public education and outreach programs for water conservation and phosphorus reduction.

Spokane County is working toward collaborative efforts with other dischargers and future phosphorus load reductions resulting from future collaboration will be documented.

Bio-Available Phosphorus

Foundational Concepts describes quantification of bio-available phosphorus as an available action for addressing the "delta" between treatment technology and phosphorus reduction goals. Wastewater treatment facilities that produce effluent with extremely low phosphorus concentrations may remove bio-available phosphorus and the remaining phosphorus that is discharged may not be bio-available. If so, *Foundational Concepts* suggests that Ecology will give credit for the amount of phosphorus remaining as long as it is demonstrated to not be bio-available.

Recent testing of phosphorus speciation in other communities in the region suggests that the soluble, nonreactive phosphorus concentration in municipal wastewater is between 0.010 mg/L and 0.015 mg/L. The load to the Spokane River from soluble, nonreactive phosphorus for the total projected flows from the entire Spokane County service area is shown in Table A11-6.

More recently, bioassay studies funded by the Washington Department of Ecology and Spokane River wastewater utilities, conducted by researchers at the University of

Washington, have found little bioavailable phosphorus remains after advanced treatment. Bioassays have been conducted on samples taken from advanced phosphorus removal pilot facilities operating at the City of Spokane's Riverside Park wastewater facility. Researchers are analyzing the influent and effluent of the pilot facility for total phosphorus removal. Subsequent analyses are used to quantify the bioavailable phosphorus percentage in each sample. The influent concentrations were around 0.500 mg/L TP with effluent concentrations of approximately 0.020 mg/L TP. The remaining bioavailable phosphorus in the influent to the advanced pilot treatment facility (effluent of the conventional treatment plant) was around 70 percent and decreased to less than 10 percent in the final effluent. When considering the phosphorus that is available for plant and animal uptake, the pilot facility is achieving 99.6 percent removal. The majority of the effluent phosphorus is non-reactive and does not support algal growth. Future research is required to quantify results from other low phosphorus removal facilities.

Table A11-6. Phosphorus Load Reduction by Accounting for Soluble, Nonreactive Phosphorus

Year	Total Average Annual Wastewater Flow, mgd	Estimated Concentration of Soluble, Nonreactive Phosphorus, mg/L[1]	Phosphorus Load Reduction, lbs/day
2010	8.9	0.01	0.742
2015	11.2	0.01	0.934
2020	13.9	0.01	1.16
2025	16.5	0.01	1.38
2030	19.2	0.01	1.60

[1] Estimated concentration of soluble nonreactive phosphorus is based on recent pilot studies for four treatment technologies in the Spokane River watershed.

Source Control Programs

Source control programs target phosphorus reduction in wastewater, so there is less phosphorus that must be removed through biological, physical/chemical, and mechanical treatment.

One example of phosphorus reduction through source control is the State of Washington statewide phosphate dishwashing detergent ban. This ban was been signed by the Governor and took effect in Spokane County in 2008 and will be in effect statewide in 2010. Spokane County Commissioner Todd Meilke was instrumental in bringing the phosphate dishwashing detergent ban to the legislature during the TMDL collaboration process.

Recent studies indicate that each dishwasher generates wastewater phosphorus of 10.2 grams/week (Hanrahan and Winslow, 2004). The total load of phosphorus removed from the influent of the SCRWRF is estimated assuming 70 percent of the households in Spokane County use automatic dishwashers. The phosphorus removal efficiency of the SCRWRF, to treat wastewater influent with 5 mg/L of P to effluent with 0.05 mg/L of P, is approximately 99 percent. Using the same phosphorus removal efficiency of SCRWRF, the total phosphorus load reduction in the effluent by reducing the influent load is shown in Table A11-7.

Table A11-7. Phosphorus Load Reduction through Source Control Programs

Year	Approximate Number of Connected Households (ERU's)	Phosphorus Reduction to Influent, lbs/day[1]	Phosphorus Load Reduction, lbs/day
2010	0	0	0
2015	13,136	42.2	0.422
2020	17,281	55.5	0.555
2025	21,427	68.8	0.688
2030	25,573	82.2	0.822

[1] Assumes 70 percent of households in Spokane County use an automatic dishwasher and treatment process removal rate is 99%.

Regional Non-Point Source Reduction Programs

The *Foundational Concepts* document calls for the NPDES permit holders and the Department of Ecology to jointly fund and implement a regional nonpoint source (NPS) phosphorus reduction program. Initially, a NPS study will be conducted to identify non-point sources, and to develop a reduction plan to address NPS pollution. The Department of Ecology will integrate the reduction plan into an implementation plan for the watershed. The funding is targeted at $2 million/year beginning in the second year of the Managed Implementation Plan and continuing for 10 years. The regional non-point source program will be designed to reduce NPS phosphorus contributions to the Spokane River, and contribute to the Delta reduction efforts of the participants.

Potential Non-Point Source Reduction – Lawn and Landscape Fertilizer Restrictions

Phosphorus loading contributed from lawns occurs through two pathways: leaching to groundwater and from runoff. Runoff is suspected to be the greater loading mechanism for lawns. By comparison, leaching to groundwater is the primary loading mechanism from onsite sewage disposal system (septic tank) drainfields.

Spokane County may consider measures to reduce phosphorus loading from fertilizers in the Spokane River watershed through ordinances that ban or restrict phosphorus from commercial fertilizers. In many instances, fertilizers with nitrogen and no phosphorus may actually be an enhancement that helps turf compete with weeds. Many golf courses use low phosphorus fertilizer for this purpose. Whether this is feasible for soils in Spokane County depends on the soil type at each fertilized site. Some soils may need more phosphorus. Ordinances in other parts of the United States that have adopted low, limited, or zero phosphorus allow some phosphorus in fertilizer if a soil test shows a need, or if it is a newly established turf grass area.

A local demonstration may be needed to help promote the acceptability of phosphorus fertilizer bans in the Spokane area. As an example, in the Prior Lake-Spring Lake Watershed District in Minnesota, boy scouts collected over 200 soil samples from the community for analysis and phosphorus was not needed for these locations based on these samples. In this particular case, phosphorus was overly abundant in most of the samples.

The phosphorus content of conventional commercial fertilizers varies considerably. Virtually any mixture of nitrogen, phosphate, and potassium is available to the public for

fertilization of landscaping and turf areas. For the purposes of estimating the phosphorus load reduction resulting from a restriction of phosphorus in commercial fertilizers in this *2007 Wastewater Facilities Plan Amendment*, the projected phosphorus load reduction will be based on restricting fertilizer with an N-P-K ratio of 27-10-0 and allowing fertilizer with a ratio of 33-0-0.

Commercial fertilizer is normally applied in areas of urban open space, such as parks, golf courses, and school yards. To estimate the phosphorus load from commercial fertilizer in the TMDL baseline year, the 2001 National Land Cover Dataset project (NLCD) GIS layer was used. This layer was produced cooperatively by the USGS and EPA. The designated class, Land Cover Class # 21 - Developed, Open Space, from this layer is used as a surrogate for estimating the total area of fertilizer application to non-agricultural lands. The total area of developed, open space within the limits of the Spokane River basin and the boundary of Spokane County was summarized from these data.

Much of the phosphorus applied in fertilizer is used by the crop (e.g., grass), and only a portion of the phosphorus applied in commercial fertilizers will be transported to surface water or leach to groundwater. For the purpose of estimating the loading to surface water and groundwater for this *2007 Wastewater Facilities Plan Amendment*, a phosphorus retention factor of 0.999 is used. Table A11-8 shows the estimated phosphorus load reduction to the Spokane River through a ban of phosphorus in commercial fertilizer based on the TMDL baseline year of 2001, if the ban were to be implemented in 2010.

Table A11-8. Phosphorus Load Reduction through Regulation of Fertilizers

Year	Approximate Area of Developed Open Space, Acres	Phosphorus Fertilizer Application Rate, lbs/acre[1]	Phosphorus Load Reduction, lbs/day
2000	80,000	34.8	0
2005	76,080	34.8	0
2010	72,350	34.8	7.63
2015	68,800	34.8	7.63
2020	65,430	34.8	7.63
2025	62,230	34.8	7.63
2030	59,180	34.8	7.63

[1] Assumes phosphorus in standard commercial fertilizer is applied at a rate of 0.8 lbs/1,000 sf (34.8 lbs/acre).

Spokane County Stormwater Management Program

Phosphorus loads may be reduced through controlling stormwater runoff. The adoption, design, and implementation of phosphorus reducing stormwater best management practices (BMPs) will help limit the phosphorus loading from stormwater runoff. For example, in its Surface Water Design Manual, King County, Washington provides a menu of treatment train options for stormwater for new development that is located within a phosphorus-limited watershed. Such a menu of treatment train options could be provided in Spokane County.

In the Spokane River watershed, the City of Spokane Valley is developing an engineered soil for stormwater treatment to be used in stormwater BMPs, which may have coincidental benefit in reducing phosphorus contributions to groundwater. This engineered soil is expected to be described in the new Spokane Area Stormwater Management Manual.

Updated BMPs to control stormwater phosphorus loadings would need to be adopted as local development standards by Spokane County, the City of Spokane Valley, and other local jurisdictions to be effective.

A11.3 PROJECTED PHOSPHORUS LOAD TO THE SPOKANE RIVER

As Spokane County proceeds in the future, the phosphorus reduction that results from each of these phosphorus management activities will be quantified and documented for future phosphorus reduction credits. Table A11-9 describes the projected phosphorus reduction to the Spokane River resulting from Spokane County's Phosphorus Management Plan. This table currently contains phosphorus reduction credits for septic tank elimination, and provides an estimate for other future phosphorus management activities. These phosphorus management activities and credits for phosphorus reduction will be updated as Spokane County further develops and implements these efforts.

The *Foundational Concepts* document states that "Once an NPDES permit holder demonstrates reliable ability to continually meet its target, either by treatment technology or technology combined with actions to eliminate the Delta, that permit holder will have met its responsibilities for meeting waste load allocations as expressed in either the MIP or the TMDL." The *Foundational Concepts* document also authorizes a trading program of dischargers' with demonstrated surplus phosphorous, consistent with EPA guidelines, pending Ecology's verification of any surplus phosphorous offset pounds.

Through its Septic Tank Elimination Program and the analysis included in Appendix B of the *2006 Wastewater Facilities Plan Amendment*, Spokane County has provided reasonable assurance that the delta elimination activity will be accomplished, and reasonable assurance that the results of the delta elimination activity will satisfy the requirements under the Foundational Concepts document to meet an equivalency of 0.042 mg/L discharge into the Spokane River. The remainder of the potential phosphorus reduction activities discussed in this chapter merely demonstrates additional margins of safety that may be achieved by future activities of Spokane County.

A11.3.1 Potential Treatment Technology Advances

Several activities have been highlighted for potential phosphorus load reduction to the Spokane River, including advances in treatment technology that could lead to lower effluent phosphorus levels. The analysis supporting the development of the wastewater facilities plan considered the capability of current treatment technology to be 0.050 mg/L on an seasonal average basis compared to earlier draft versions of the Spokane River TMDL that were based on wasteload allocations at 0.010 mg/L and the final TMDL based on 0.042 mg/L. As operating experience is gained with the advanced phosphorus removal treatment processes, it is possible that progress will be made that reduce effluent phosphorus to levels below the TMDL wasteload allocation target of 0.042 mg/L. Table A11-9 has been updated to illustrate the potential additional phosphorus reduction credit that could be earned by reducing effluent phosphorus from the final TMDL wasteload allocation requirement of 0.042 mg/L to as low as perhaps 0.010 mg/L. Should this level of performance be demonstrated at 8 mgd, the difference in effluent loading (2.80 lb/day – 0.67 lb/day = 2.13 lb/day) could be credited to Spokane County.

Table A11-9. Summary of Potential Phosphorus Load Reductions to the Spokane River from Potential P Reduction Activities

Year	To Be Developed by Spokane County and Other Stakeholders as Part of the Spokane River TMDL Managed Implementation Plan (MIP)																Total Phosphorus Reduction for "Delta Elimination Plan"	
	Septic Tank Elimination[1]		Treatment Technology Advances[2]		Water Conservation[3]		Water Reuse		Regional Phosphorus Reduction Programs		Bio-Available Phosphorus Reduction		Source Control Programs		Regional Non-Point Source Reduction Programs			
	lbs/d	lbs/yr	lbs/d	lbs/yr	lbs/d	lbs/yr	lbs/d	lbs/yr	lbs/d	lbs/yr	lbs/d	lbs/yr	lbs/d	lbs/yr	lbs/d	lbs/yr	lbs/d	lbs/yr
2005	3.8	1,387	0	0	0	0	0	0	0	0	0	0	0	0	0	0	3.8	1,387
2010/12	6.1	2,227	0	0	0	0	0.768	280	0	0	0.742	271	0	0	7.63	2,785	15.2	5,563
2015	12.2	4,453	2.13	778	0.126	46	1.08	394	0	0	0.934	341	0.422	154	7.63	2,785	24.5	8,951
2020	12.2	4,453	2.13	778	0.308	112	2.16	788	0	0	1.16	423	0.555	203	7.63	2,785	26.1	9,542
2025	12.2	4,453	2.13	778	0.543	198	3.24	1,183	0	0	1.38	504	0.688	251	7.63	2,785	27.8	10,152
2030	12.2	4,453	2.13	778	0.837	306	4.32	1,577	0	0	1.60	584	0.822	300	7.63	2,785	29.5	10,783

[1] Phosphorus reduction resulting from septic tank elimination is based upon the minimum load reduction developed in Table A11-2 with a high margin of safety.
[2] Value is based on operation of SCRWRF with 8 mgd annual average discharge of effluent phosphorus of 0.042 mg/L.
[3] Values are based on 0 lbs/day phosphorus load reduction in 2010 from sustainable (e.g., LEED) building construction and is increased linearly to 0.036 lbs/day in 2030. Plumbing code enforcement may reduce overall water demand and wastewater flows by 10 percent reduction in 20 years from 2010 to 2030.

A12.1 INTRODUCTION

The purpose of this chapter is to discuss effluent variability and how Spokane County proposes to comply with the *Final TMDL*. This is consistent with the statement in the *Final TMDL "Effluent limits that implement wasteload allocations in NPDES permits need not be identical to the wasteload allocations in order to be consistent with the wasteload allocations (EPA Environmental Appeals Board, 10 E.A.D. 135, 2001).* For the SCRWRF, Spokane County proposes to meet a lower CBOD limit than is specified in the *Final TMDL*, but meet a higher ammonia limit in March and a higher phosphorus limit throughout the TMDL season (March-October). As discussed below, the water quality model being used for the *Final TMDL* predicts that this adjustment will improve the dissolved oxygen in Long Lake.

Factors that influence dissolved oxygen in the Spokane River and Lake Spokane include carbonaceous biochemical oxygen demand (CBOD), ammonia nitrogen, and phosphorus. Each discharger to the Spokane River has a unique combination of existing or planned wastewater treatment facilities and resulting effluent characteristics. The municipal dischargers generally have similar influent wastewater characteristics but individual treatment processes may alter the site specific effluent parameters. Even if effluent phosphorus levels are very low (~0.050 mg/L), the effluent CBOD and ammonia may vary as a result of the treatment processes employed. Seasonal sensitivity to temperature effects on nitrification rates can impact effluent ammonia concentrations. Further, the geographic location of individual discharges to the Spokane River influences the resulting impact on water quality in Lake Spokane. Overall, effluent quality differences and discharge location combine to create a complex interaction between effluent quality and receiving water impact. For these reasons, simple computational relationships that translate equivalent combinations of CBOD, ammonia and phosphorus that meet the TMDL water quality requirements are difficult, if not impossible, to define.

Combinations of CBOD, ammonia and phosphorus can be varied, while still meeting dissolved oxygen requirements. Changes to the effluent parameters can be optimized for a specific discharger. However, there are no simple factors that can be used to exchange between CBOD, ammonia and phosphorus that fit all dischargers. The Spokane County Regional Water Reclamation Facility is an example of this. As discussed in Chapter 2, lower effluent CBOD concentrations can offset higher March ammonia nitrogen concentrations and achieve the same level of water quality protection for Lake Spokane. Water quality modeling of the Spokane River was used to demonstrate the equivalency of water quality impact to satisfy the TMDL requirements due to the complexity of interchanging parameters and the receiving waters.

This chapter presents a discussion of nutrient and dissolved oxygen TMDL parameters with details regarding their interactions, including Spokane County's dissolved oxygen parameters and how these parameters affect water quality in Lake Spokane. A discussion

of alternative, yet equivalent, combinations of effluent CBOD, phosphorus, and ammonia-nitrogen concentrations are also provided. River modeling efforts are discussed regarding changes to CBOD, TP and ammonia concentrations and their effects on water quality. Based on the information presented here and in Chapter 2, effluent limits for Spokane County can be adjusted from the TMDL wasteload allocation which will cause a net increase in the dissolved oxygen concentrations in Lake Spokane. Finally, the County's plan for "Delta management" under the TMDL is documented.

A12.2 SPOKANE COUNTY DISSOLVED OXYGEN PARAMETERS

Many parameters influence dissolved oxygen concentration. Dissolved oxygen in water is introduced primarily from aeration by the atmosphere; after dissolving at the air-water interface, oxygen is distributed by currents and turbulence into the water column. Water temperature, pressure, elevation, and salinity affect the dissolved oxygen capacity of the water. Dissolved oxygen in the water column is then affected by four processes:

- Respiration of algae, epiphyton, periphyton, macrophytes and other aquatic organisms
- Photosynthesis of the same organisms
- Decay of organic matter in the water and sediments
- Nitrification of ammonia nitrogen

An endless combination of these influences from multiple point and nonpoint sources under various conditions affect the resulting water column dissolved oxygen. The relationship between water temperature, elevation, and dissolved oxygen is relatively straightforward. For the other influences, the relationship is not as easily defined. There is no simple translation between individual parameters such as CBOD, ammonia, or phosphorus, and dissolved oxygen.

For aquatic organisms such as algae, growth and photosynthesis is driven by the availability of fundamental building blocks including phosphorus/phosphate, nitrogen/nitrate-nitrite/ammonium, carbon, and silica. The growth results in increased dissolved oxygen concentrations through photosynthesis (photosynthesis uses carbon dioxide and water, releasing oxygen) and the removal of dissolved oxygen through respiration (respiration requires oxygen in order to generate energy). As summarized in the TMDL, this results in dissolved oxygen levels that "*fluctuate over the day and night in response to changes in climatic conditions as well as the respiratory requirements of aquatic plants and algae.*" Aquatic organisms also excrete wastes and die, providing organic matter which then decays. The decay process consumes oxygen as the materials are converted to carbon dioxide and water by biological oxidation.

CBOD, ammonia nitrogen, and phosphorus all interact differently in aquatic systems and consume oxygen by different means. CBOD consumes oxygen through the decay process. For the Spokane River TMDL, individual CBOD levels were assigned to each

of the point sources. This allowed for varying decay rates and the separate tracking of each source. Nitrification is the biological oxidation of ammonia with oxygen into nitrite followed by the oxidation of nitrites into nitrates. This oxidation process requires oxygen and thus reduces the dissolved oxygen concentration. Phosphorus indirectly influences dissolved oxygen through the growth and decay of aquatic organisms. Phosphorus is a primary nutrient for algae growth and in many waters is considered to be limiting. Reducing phosphorus may reduce algae growth and decay (when it is the limiting factor) and thus decrease the oxygen consuming demand.

A12.3 CONNECTION BETWEEN SCRWRF AND LAKE SPOKANE

The February 2010 *Spokane River and Lake Spokane Dissolved Oxygen TMDL Water Quality Improvement Report (Final TMDL)* addresses low dissolved oxygen concentrations in Lake Spokane. The TMDL states the supporting model simulations "*confirmed that dissolved oxygen is significantly depleted by anthropogenic (human-caused) pollution sources*." Pollution sources as well as impacts caused by Long Lake Dam affect water quality in Long Lake. "*Both point and nonpoint sources of pollutant loading contribute to violations of water quality criteria*" in the Spokane River watershed. Point sources, however, are regulated under NPDES and nonpoint source reductions are voluntary. The goal of the TMDL is to improve dissolved oxygen concentrations by reducing pollutant loadings.

Multiple parameters influence dissolved oxygen concentrations, including CBOD, ammonia nitrification, and indirectly, phosphorus. In the TMDL, Ecology states that "*phosphorus has the most significant impact on algal production…*" and that "*algal production significantly contributes to dissolved oxygen depletions.*" However, the TMDL also states that "*dissolved oxygen is also impacted by CBOD and ammonia.*"

These influences can be addressed through a combination of approaches that reduce sources and discharges. The TMDL examines a few of the potential combinations and defines a management alternative. Limited resources allowed the examination of only three TMDL scenarios. By implementing the selected alternative Ecology states that "*Management of these pollutants, according to this dissolved oxygen TMDL, will result in restoration and protection of existing and designated uses provided in Washington's water quality standards, and will also improve dissolved oxygen conditions downstream of Lake Spokane.*"

A12.4 WATER QUALITY COMPLEXTITY

There is no simple method or single equation that relates discharged parameters to dissolved oxygen impacts in a water body, because dissolved oxygen concentrations are a result of a combination of factors. There is a relationship between effluent CBOD, ammonia and phosphorus where there is some degree of interchangeability between parameters. Generalized trends between parameters and dissolved oxygen are known based on the physical, chemical, biological, and limnology of a system. This provides a

general sense of what combinations of parameters would equate to similar dissolved oxygen concentrations, but not quantitative equivalents. For example, the variability in individual dischargers along the Spokane River demonstrate this principle with the variety of inputs that were developed for the TMDL and no single set of effluent parameters was used to represent all dischargers. Furthermore, the CE-QUAL-W2 model code reflects the interaction of constituents and the multiple potential combinations of different inputs that could generate similar dissolved oxygen results. The model is the best method to quantitatively demonstrate different combinations of inputs that can provide similar water quality results.

A12.5 MODELING OF EQUIVALENT PARAMETERS

To reflect this complexity in water quality conditions and its effect on the Spokane River, a water quality model is required. The CE-QUAL-W2 model is capable of conducting this analysis allows these relationships to be analyzed in the same manner used to prepare the TMDL.

This model integrates multiple equations that represent the various processes and parameters that influence dissolved oxygen. For the TMDL, "*Ecology chose to use the capabilities of the CE-QUAL-W2 model developed by the U.S. Army Corps of Engineers. The CE-QUAL-W2 model was chosen because it is considered state-of-the-science, and it has been used to simulate many other reservoirs. In addition, the model is well documented, nonproprietary, and has technical support readily available.*" A dynamic tool, like CE-QUAL-W2, is also able to estimate dissolved oxygen concentrations given variable conditions and changing conditions over time. Dissolved oxygen concentrations vary across space and time in Lake Spokane.

Spokane County conducted a water quality modeling effort using the CE-QUAL-W2 model developed by Portland State University for Ecology to examine the effect of alternative Spokane County effluent limits on dissolved oxygen concentrations. The TMDL wasteload allocation assumes very low concentrations of effluent ammonia nitrogen (0.83 mg/L) in the month of March. From a wastewater treatment process standpoint, this may be difficult to achieve because the nitrification process is very sensitive to wastewater temperatures and reaction rates slow significantly with cooler temperature. Consequently, March ammonia limitations would control overall treatment process sizing and result in over-sizing of activated sludge reactors that provide no additional water quality benefit. For these reasons, higher March effluent ammonia limits for the SCRWRF may be more appropriate and provide the same level of water quality protection in the Spokane River and Lake Spokane.

To demonstrate this, two alternative scenarios were modeled to investigate the sensitivity of Lake Spokane dissolved oxygen concentrations to changes in March effluent ammonia discharges from the SCRWRF. One alternative used ammonia concentrations of 16 mg/L in March, 1.0 mg/L in April and May, and 0.25 mg/L in June through September. The

CBOD concentration for this alternative was set at 2.0 mg/L based on the expected performance of the SCRWRF membrane bioreactor treatment process, compared to the TMDL wasteload allocation for CBOD of 4.2 mg/L. The effluent phosphorus concentration was 0.050 mg/L based on the expected performance of the treatment technology, compared to the TMDL wasteload allocation concentration of 0.042 mg/L. The second alternative modeled an ammonia concentration of 1.0 mg/L in March through May and 0.25 mg/L in June through September. Again, the CBOD and phosphorus concentrations were of 2.0 mg/L and 0.050 mg/L respectively.

The modeling results presented in Chapter 2 and Appendix A2 indicate that the alternative discharge limits for Spokane County would not decrease dissolved oxygen in Long Lake, and would in fact cause a slight increase to oxygen in Long Lake. The reason for this water quality improvement is the significant decrease in CBOD concentration in the effluent from the SCRWRF (2.0 mg/L) compared to the TMDL wasteload allocation scenario (4.2 mg/L). The effect of lower CBOD concentration partially offsets the increased ammonia discharge in March. The reduction of CBOD, of which phosphorus is a fraction in the CE-QUAL-W2 model, also offsets the increased in orthophosphate. The water quality modeling analysis using CE-QUAL-W2 demonstrates that the following SCRWR effluent characteristics result in dissolved oxygen concentrations in Lake Spokane that are the same, or better than the TMDL wasteload allocation:

- Effluent CBOD March – October: 2.0 mg/L
- Effluent Phosphorus March – October: 0.050 mg/L
- Effluent Ammonia
    - March: 16 mg/L
    - April and May, October: 1.0 mg/L
    - June – September: 0.25 mg/L

The results of this modeling analysis concur with Ecology's findings that phosphorus has a greater impact on Lake Spokane water quality than CBOD and ammonia. Further, CBOD has a greater impact than ammonia because in the CE-QUAL-W2 model it includes a percentage of phosphorus and has a slower decay rate. In the future, water quality modeling analysis of tradeoffs between effluent parameters may be useful in investigating various combinations of phosphorus, CBOD, and ammonia to demonstrate equivalent protection of water quality in Lake Spokane for compliance with TMDL. Potential scenarios that may become important to consider in the future include revisions that reflect actual full-scale operating performance for CBOD and ammonia when operating the low effluent phosphorus treatment process, variability in effluent concentrations with time, improved science that enhances the understanding of phosphorus speciation, the results of phosphorus bioavailability studies, etc.

A12.5.1 Future Modeling of Equivalent Parameters

Although it would be convenient to define simple relationships between effluent discharge parameters and resulting impacts on Lake Spokane dissolved oxygen, it may not be possible without modeling the river system. The CE-QUAL-W2 water quality model of the Spokane River was the tool used to develop the Spokane River TMDL and determine the allowable loadings for the desired dissolved oxygen concentrations. The CE-QUAL-W2 model represents specific flows and other conditions, including discharge constituent concentrations from the Spokane County Water Reclamation Facility, that result in the predicted dissolved oxygen concentrations in Long Lake. The constituents in the discharge include specific concentrations of BOD, soluble reactive phosphorus (SRP), and ammonia nitrogen. Other combinations of different concentrations for these constituents exist that would result in an equivalent dissolved oxygen prediction in Lake Spokane. However, the single combination used in the TMDL cannot be extrapolated into a relational equation to know these alternative combinations. Attempting to simplify the complex equations in the CE-QUAL-W2 model that perform the fate, transport, and inter-mixing of these constituents into the resulting dissolved oxygen concentrations in Lake Spokane would likely not provide a reliable indication of the model's prediction results and circumvent the purpose of the tool. Instead, the water quality model would need to be use to simulate various concentrations of effluent parameter to search for equivalent combinations. Since a desired equivalent dissolved oxygen result in Lake Spokane is sought, multiple simulations would be required and many that are tested may not prove to be an equivalent combination. Combinations that were found to result in equivalent dissolved oxygen concentrations could potentially be used to develop a surface of points representing the equivalent combinations of constituent concentrations. Such a normalizing task could be a tedious and time consuming task. An alternative approach would be to simulate combinations that are preferable and attainable by the specific facility in consideration to determine if the dissolved oxygen predictions are equivalent.

A12.6 DELTA ELIMINATION PLAN

The February 2010 *Spokane River and Lake Spokane Dissolved Oxygen TMDL Water Quality Improvement Report* includes *Appendix D: 2007 Memorandum of Agreement and Foundational Concepts* (Final TMDL) describes "*target pursuit actions*" which include a combination of both treatment technology and "delta" elimination efforts to reduce Spokane County's phosphorus load to the Spokane River. The *Final TMDL* describes the "delta elimination plan" *(Final TMDL, page 37)* to bridge the gap between the 0.042 mg/L effluent total phosphorus target in the TMDL wasteload allocation *(Final TMDL, Table 5)* and the capabilities of treatment technology to meet a seasonal average of 0.050 mg/L effluent total phosphorus.

The wasteload allocation for Spokane County is based upon an annual average influent flow rate of 8 mgd and a seasonal average effluent concentration of 0.042 mg/L phosphorus for a 2.80 lbs/day loading. The difference between the effluent phosphorus

loading at 0.042 mg/L in the wasteload allocation and the capabilities of treatment technology at 0.050 mg/L is 0.53 lbs/day. The wasteload allocation for CBOD is based on an effluent concentration of 4.2 mg/L for a 280.4 lbs/day loading.

Spokane County's "delta elimination plan" includes a combination of both treatment technology and "delta" elimination efforts as described in the Foundational Concepts to satisfy the requirements of the *Final TMDL*. The following paragraphs describe the plan, as well as provision of an adequate margin of safety and reasonable assurance.

A12.6.1 Treatment Technology Selection

Spokane County has selected the membrane bioreactor (MBR) treatment process for the SCRWRF to satisfy the multiple objectives of the *Final TMDL*. This MBR process is capable of producing low effluent phosphorus concentrations, as well as effluent CBOD at levels lower than called for in the TMDL wasteload allocation. The effluent from the SCRWRF (2.0 mg/L CBOD) will be lower than the specified TMDL wasteload allocation scenario (4.2 mg/L CBOD) throughout the entire calendar year. As described in Section A12.5 above, the effect of the lower CBOD concentration is to offset both an increased ammonia discharge in March, as well as the difference between the SCRWRF effluent phosphorus at 0.050 mg/L and the wasteload allocation concentration of 0.042 mg/L. The water quality modeling results presented in Chapter 2 and Appendix A2 indicate that the SCRWRF discharge will meet the *Final TMDL* requirements for dissolved oxygen in Lake Spokane, and would in fact cause a slight increase to oxygen in Lake Spokane. Because the modeling demonstrates that the County's treatment technology provides effluent nutrient loading to the river that causes less impacts to DO than the wasteload allocations to the County, no offsets (delta elimination) will be required for the County to meet the wasteload allocation in the Final TMDL.

Margin of Safety and Reasonable Assurance

The water quality modeling analysis demonstrating compliance with the Final TMDL was conducted in the same manner as the analysis used for the TMDL scenarios and therefore includes the same margins of safety and the same provisions for reasonable assurance as the TMDL itself. The *Final TMDL* (Final TMDL, page 20) states that "*By using a representative critical low flow year, the water quality in Lake Spokane and the Spokane River should be adequately protected as further described below and in the Margin of Safety section.*" The *Final TMDL* (Final TMDL, 51) itemizes the specific factors contributing to the margin of safety as follows:

- *"Low flows (2001) were used as the baseline hydrologic condition*
- *For each tributary, the headwater phosphorus concentration has been used as the "natural background" concentration at the mouth of the tributary, even though natural phosphorus concentrations may increase between the headwaters and the mouth*
- *Stormwater flows from an "average" rainfall year have been assumed to occur during the 2001 low-flow year; similarly, groundwater flows have been assumed*

which are greater than those that would be expected to occur during a critical low flow year

- *All phosphorus is assumed to be bioavailable*
- *The top eight meters of the reservoir are not included in the vertical averaging because of amplified algal activity which increases daytime dissolved oxygen levels*
- *Conservative assumptions were used in assignment of a load allocation for groundwater and runoff directly entering Lake Spokane ("Lake Watershed")*

Therefore, Spokane County's treatment technology selection meets the water quality requirements for the Spokane River and provides the same margin of safety and reasonable assurance called for in the Final TMDL.

A12.6.2 Delta Elimination Plan for Phosphorus

The *Final TMDL* calls for dischargers to prepare and submit to Ecology a *Delta Elimination Plan* and schedule for other phosphorus removal actions including conservation, reuse, source control, and regional nonpoint source control efforts (Final TMDL, page 62). Spokane County has developed a robust plan for meeting the requirements of the *Final TMDL* that includes a combination of both treatment technology and "delta" elimination efforts to reduce Spokane County's phosphorus load to the Spokane River.

The County has two specific mechanisms in place to make up the difference, if necessary, between actual phosphorus performance and the TMDL wasteload allocations. First, better BOD removal than what is specified in the Final TMDL wasteload allocation compensates for ammonia and phosphorus concentrations higher than the TMDL wasteload allocation values. Second, the County's delta elimination plan provides alternative phosphorus removal actions that count towards the County's phosphorus removal requirement, including septic system elimination offsets.

Chapter 11 herein, Phosphorus Management Plan, documents the County's plan to address this requirement and it presents a number of actions to further reduce phosphorus loadings. The Phosphorus Management Plan, in combination with the phosphorus reduction from treatment technology, provides additional reasonable assurance of meeting Spokane County's phosphorus loading target when the new Spokane County Regional Water Reclamation Facility (SCRWRF) begins operation. As stated previously, the County's proposed effluent limits for CBOD, ammonia, and phosphorus are more protective of dissolved oxygen in Lake Spokane than the wasteload allocations in the Final TMDL, so no offsets are proposed to be used for normal routine operations after the initial two-year startup period.

Interim Performance-based Limits

The Final TMDL (Final TMDL, page 63) recognizes that when new treatment technology is installed, attaining optimal performance will be challenging and that achieving normal and routine operation may require two years, or more, assuming average seasonal conditions. During this period, Ecology will recognize these conditions with interim discharge limits based on actual performance of the technology installed and operated at optimum efficiency. Final water quality based effluent limits will be based on effluent data combined with offsets from the Delta Elimination Plan.

Spokane County will utilize water quality offsets, if necessary, to make up the difference between effluent phosphorus performance and the Final TMDL wasteload allocations during the interim operational period while optimizing SCRWRF performance. Spokane County has developed, and Ecology has reviewed, a nonpoint source phosphorus offset based on the Spokane County Septic Tank Elimination Program, as documented in Chapter 11 and the technical memorandum in Appendix B of the *2006 Wastewater Facilities Plan Amendment*. The range of annual total phosphorus load reduction to the Spokane River is summarized in Table A11-2. The lower range of annual total phosphorus load reduction to the Spokane River in 2015 is estimated to be 4,440 lbs (12.2 lbs/day). The upper range of annual total phosphorus load reduction to the Spokane River in 2015 is estimated to be 7,400 lbs (20.3 lbs/day). For comparison, if interim effluent phosphorus performance at the SCRWRF facility were hypothetically to be 0.100 mg/L at a flow of 8 mgd, the difference from effluent at 0.050 mg/L would be only 3.34 lbs/day.

The approach used in this analysis for estimating the septic system water quality offset provides a generous margin of safety in that it underestimates historic septic system phosphorus concentrations, underestimates historic hydraulic loadings, overestimates sorption capacity of soils, ignores phosphorus movement into the groundwater system prior to full sorption capacity of the soil being reached and includes a conservative assumption that the aquifer retains 50 to 75 percent of the phosphorus loading.

A12.7 REFERENCES

LimnoTech, Inc., "*Draft Water Quality Assessment of Alternate Spokane County Permit Limits*," March 11, 2010.

Washington Department of Ecology, "*Spokane River and Lake Spokane Dissolved Oxygen Total Maximum Daily Load, Water Quality Improvement Report*," Publication No. 07-10-073, Revised February 2010.