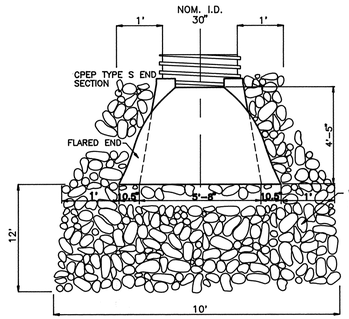

2/18 PIPE OUTFALL & RIPRAP DETAIL

N.T.S.

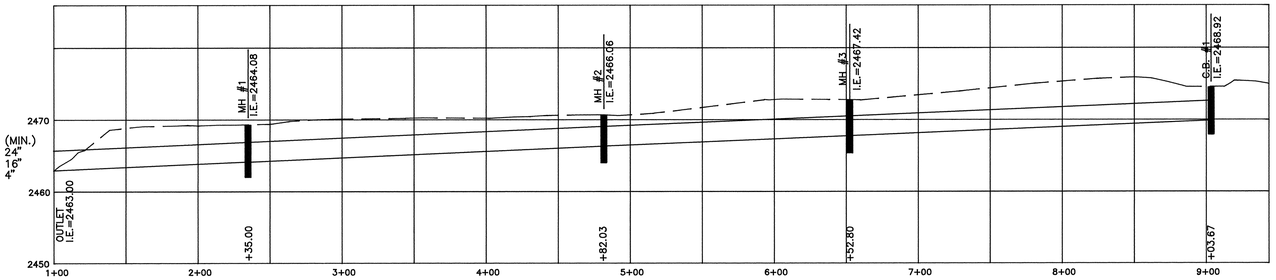

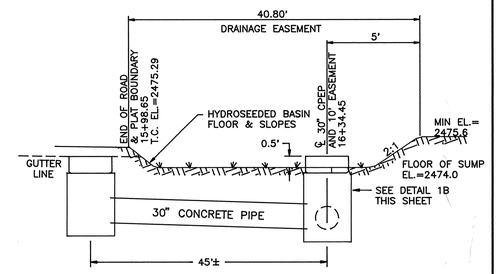

B/18 SILTING BASIN SECTION

N.T.S.

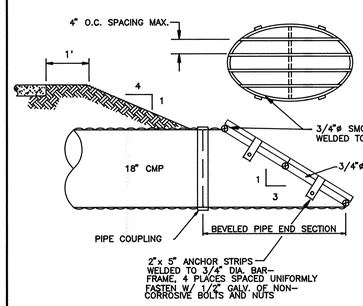

PIPE GRATE DETAIL

NTS

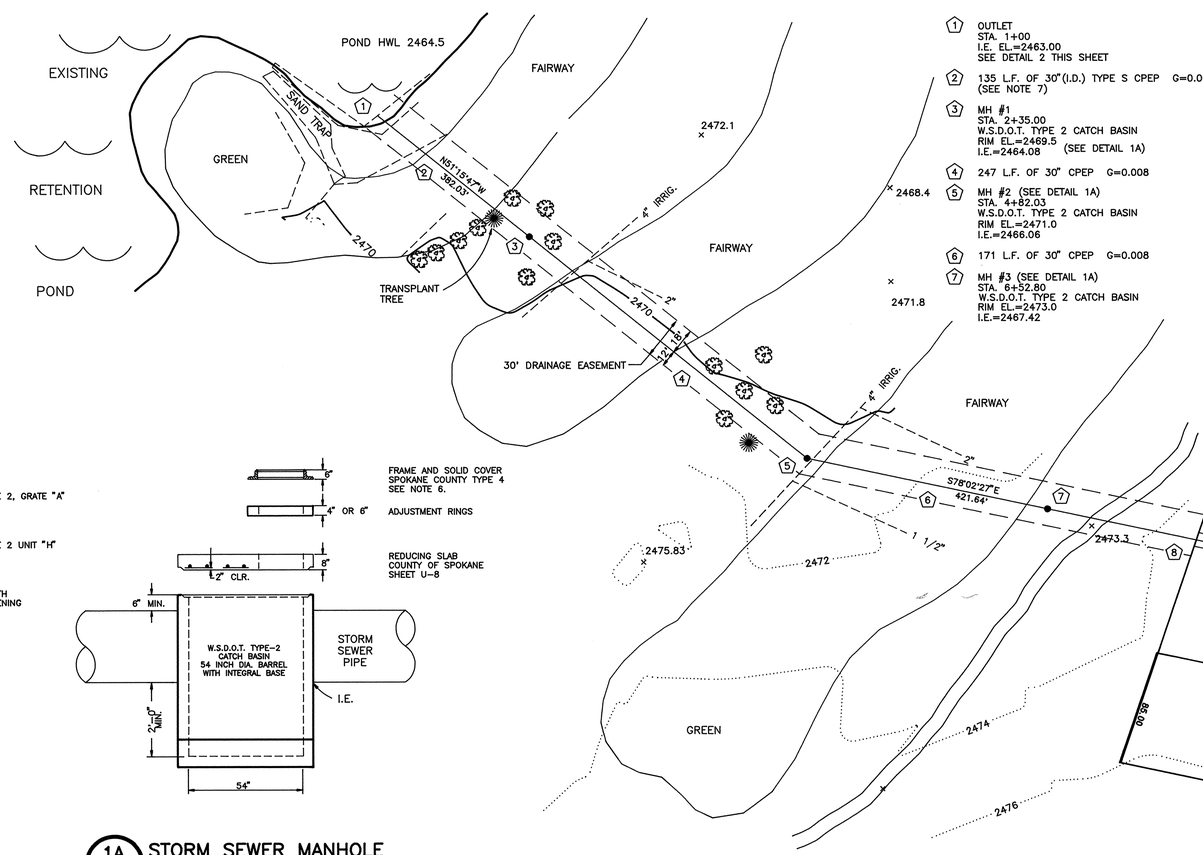

1. OUTLET
   STA. 1+00
   I.E. EL.=2463.00
   SEE DETAIL 2 THIS SHEET
2. 135 L.F. OF 30"(I.D.) TYPE S CPEP G=0.008
   (SEE NOTE 7)
3. MH #1
   STA. 2+35.00
   W.S.D.O.T. TYPE 2 CATCH BASIN
   RIM EL.=2469.5 (SEE DETAIL 1A)
   I.E.=2464.08
4. 247 L.F. OF 30" CPEP G=0.008
5. MH #2 (SEE DETAIL 1A)
   STA. 4+82.03
   W.S.D.O.T. TYPE 2 CATCH BASIN
   RIM EL.=2471.0
   I.E.=2466.06
6. 171 L.F. OF 30" CPEP G=0.008
7. MH #3 (SEE DETAIL 1A)
   STA. 6+52.80
   W.S.D.O.T. TYPE 2 CATCH BASIN
   RIM EL.=2473.0
   I.E.=2467.42
8. 251 L.F. OF 30" CPEP G=0.006
9. C.B. #1 STA. 9+03.67 =
   STA. 16+34.36, WEST TERRACE DR.
   18' LT., CENTER OF STRUCTURE
   C.B. PER DETAIL 1B, SET W/SHORTER DIMENSION PARALLEL TO GUTTER
   T.O.G.=2474.51
   I.E.=2468.92
10. 40 L.F. OF 30" CONC. PIPE, G=0.010
    (SEE NOTE 8)
11. C.B. #2
    STA. 16+34.36, WEST TERRACE DR.
    18' RT., CENTER OF STRUCTURE
    C.B. PER DETAIL 1B, SET W/SHORTER DIMENSION PARALLEL TO GUTTER
    T.O.G.=2474.51
    I.E.=2469.32
12. 45 L.F. OF 30" CONC. PIPE, G=0.008
13. C.B. #3
    STA. 15+89.5, WEST TERRACE DR.
    18' RT., CENTER OF STRUCTURE
    C.B. PER DETAIL 1B, SET W/SHORTER DIMENSION PARALLEL TO GUTTER
    T.O.G.=2474.70
    I.E.(N)=2469.68
    I.E.(E)=2470.48
14. 14.3 L.F. OF 18" CMP, G=0.182
15. CULVERT INLET
    STA. 15+88.5, WEST TERRACE DR. =
    STA. 17+62.5, INTERCETOR DITCH
    INLET I.E.=2473.08
    (SEE PIPE GRATE DETAIL)

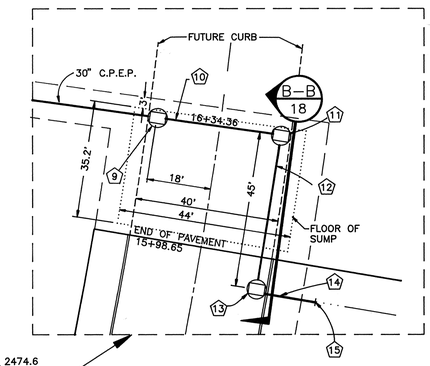

NOTE:
ALL WORK SHALL BE PERFORMED IN ACCORDANCE WITH 1991 STANDARD SPECIFICATIONS FOR ROAD, BRIDGE, AND MUNICIPAL CONSTRUCTION AS PROMULGATED JOINTLY BY SPOKANE COUNTY, THE WASHINGTON STATE DEPARTMENT OF TRANSPORTATION (WSDOT) AND THE AMERICAN PUBLIC WORKS ASSOCIATION (APWA) AND ALL AMENDMENTS HERETO.

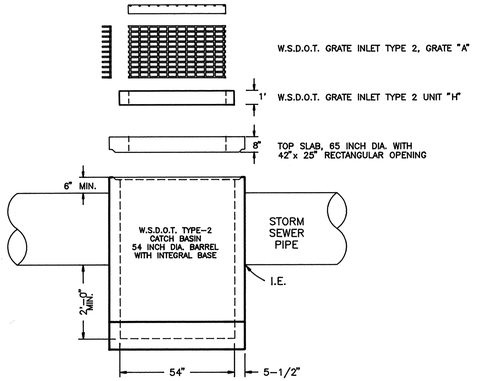

1B/18 STORM SEWER CATCH BASIN

N.T.S.

1A/18 STORM SEWER MANHOLE

N.T.S.

NOTES:

1. MANHOLES IN THE FAIRWAY GOLF COURSE SHALL BE MARKED WITH WSDOT GUIDEPOST.
2. IRRIGATION WATER LINES ARE C 900 PVC, ALL BROKEN LINES TO BE REPAIRED TO THE APPROVAL OF FAIRWAYS GOLF COURSE.
3. SOD REMOVAL AND REPLACEMENT SHALL BE IN AREAS AS SHOWN ON THE PLAN AND AS APPROVED BY FAIRWAY GOLF COURSE. THE CONTRACTOR MAY CHOOSE NOT TO REMOVE SOD BEFORE CONSTRUCTION. THE REPLACEMENT SOD SHALL HAVE PRIOR APPROVAL FROM FAIRWAYS GOLF COURSE.
4. ALL DISTURBED GRASSY AREAS THAT ARE NOT SODDED, SHALL BE HYDROSEEDED WITH GRASS SEED APPROVED BY FAIRWAYS GOLF COURSE.
5. ALL WORK AT FAIRWAYS GOLF COURSE TO BE CONFINED TO A 50' TEMPORARY CONSTRUCTION EASEMENT, CONSTRUCTION OVER THE SEWER PIPE.
6. MH COVERS SHALL BE EMBOSSED WITH THE WORD "STORM" IN 3/16" RAISED LETTERS.
7. CPEP (CORRUGATED POLYETHYLENE PIPE) STORM SEWER PIPE TO BE SMOOTH CHANNELLED, AS "ADS" TYPE "N-12" OR EQUAL. (R.R.)
8. ALL CONCRETE PIPE SHALL BE ASTM C-76, CLASS III, WITH RUBBER GASKETED JOINTS, AND SHALL MEET THE REQUIREMENTS OF ASTM C-443.

GENERAL CONSTRUCTION NOTES

1. ELEVATIONS BASED ON CITY OF SPOKANE VERTICAL DATUM.
2. THE LOCATION AND DEPTH OF EXISTING UNDERGROUND UTILITIES WHERE SHOWN ARE ONLY AN ASSUMED LOCATION BASED UPON INFORMATION PROVIDED BY THE UTILITY COMPANY. AN INVESTIGATION SHOULD BE MADE AS TO THE PRESENCE AND/OR LOCATION OF ALL UNDERGROUND UTILITIES PRIOR TO ANY ANTICIPATED CONSTRUCTION WORK OR EXCAVATIONS.
3. CONTRACTOR SHALL VERIFY ALL DIMENSIONS AND ELEVATIONS IN THE FIELD. ANY DISCREPANCIES SHALL BE BROUGHT TO THE IMMEDIATE ATTENTION OF THE OWNER AND/OR ENGINEER.
4. BEFORE ANY EXISTING VEGETATION IS REMOVED ON THE SITE, THE CONTRACTOR SHALL CHECK WITH OWNER AND PLAN IN-FIELD MARKINGS FOR THE REMOVAL OF SAME.
5. ANY CONFLICTING UTILITIES SHALL BE RELOCATED PRIOR TO INSTALLATION OF STORMWATER MANAGEMENT FACILITIES.

RANDY L. LABERPP STATE OF WASHINGTON 26660 REGISTERED PROFESSIONAL ENGINEER
3/25/94
EXPIRES 9-3-95

APPROVED FOR CONSTRUCTION
SPOKANE COUNTY ENG.
BY 26 JUL 94

PERMIT REQUIRED!
NOTIFY THE PERMIT ENGINEER
456-3600
24 HRS. PRIOR TO CONSTRUCTION

N

18/18

SEC. 7, T.24 N., R.42 E., W.M.

BY	REVISIONS	DATE	PROJ.	FROM	AS BUILT	TO	ACCEPT
ETD	△1 REVISED NOTE 8 PER LABERPP	26 JUL 94					

GRADE ORDINANCE LIST				
FROM	TO	ORD. NO.	DATE	FILE NO.

DATUM		SCALE		DATE	
BM NO.	SPIKE IN POWER POLE	HORIZONTAL	1"=50'	11/93	DRAWN RAH
ELEVATION	2469.95	VERTICAL	1"=10'		CHECKED
LOCATION	SOUTH SIDE OF MELVILLE ROAD AT WEST TERRACE DRIVE				APPROVED

AC ADAMS & CLARK, Inc.
1720 W. Fourth Ave.
Spokane, Wa. 99204-1702
509-747-4600

WEST TERRACE FIRST ADDITION
STORM DRAIN PLAN
WEST TERRACE DRIVE TO RETENTION POND

TYPE OF IMPROVEMENT: DRAINAGE
PROJECT NUMBER | PLAN NUMBER

CALL BEFORE YOU DIG 456-8000

5/24/94
3043SR2.DWG

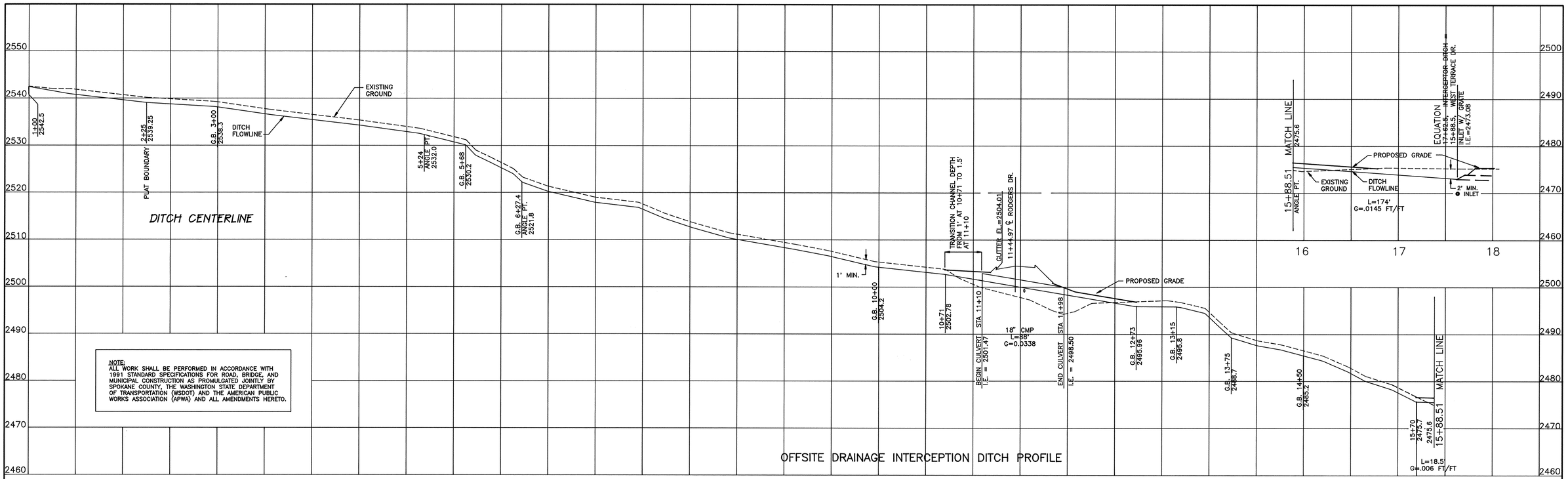

NOTE:
ALL WORK SHALL BE PERFORMED IN ACCORDANCE WITH 1991 STANDARD SPECIFICATIONS FOR ROAD, BRIDGE, AND MUNICIPAL CONSTRUCTION AS PROMULGATED JOINTLY BY SPOKANE COUNTY, THE WASHINGTON STATE DEPARTMENT OF TRANSPORTATION (WSDOT) AND THE AMERICAN PUBLIC WORKS ASSOCIATION (APWA) AND ALL AMENDMENTS HERETO.

DITCH DIMENSION TABLE			
STA.	W_1	B	W_2
1+00 TO 11+10 11+98 TO 15+70	5'	0	5'
15+70 TO 15+88	4.5'	1'	4.5'
15+88 TO 17+62.5	9.5'	1'	4.5'

Jr. Clark CONSULT ENGINEER 5/27/94

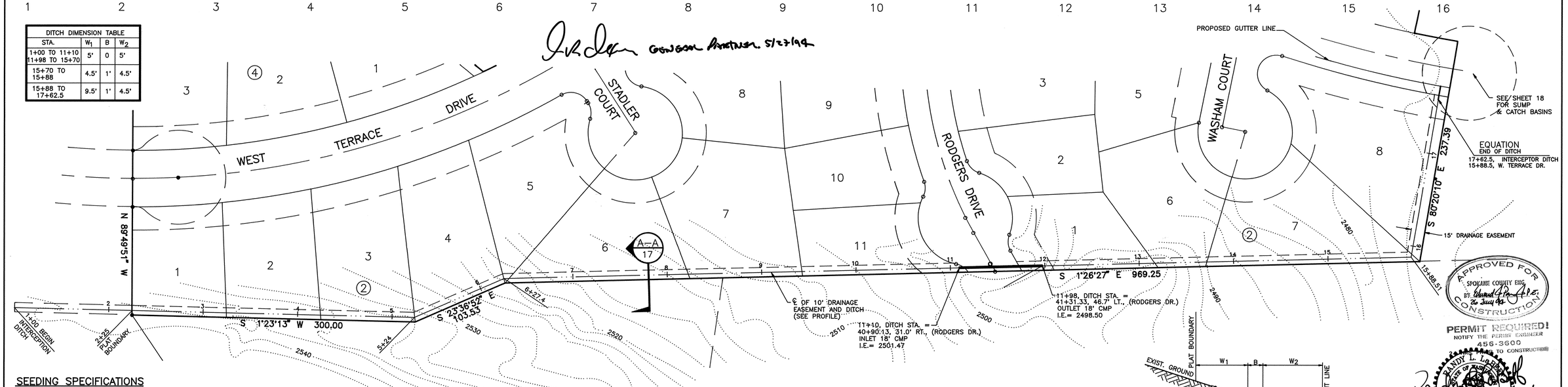

APPROVED FOR CONSTRUCTION
SPOKANE COUNTY ENG.
BY: Edward A. Pang P.E.
26 July 94

PERMIT REQUIRED!
NOTIFY THE PERMIT ENGINEER
456-3600
PRIOR TO CONSTRUCTION

RANDY L. LABRIE
STATE OF WASHINGTON
26660
REGISTERED PROFESSIONAL ENGINEER
7/25/94
EXPIRES 9-3-95

SEEDING SPECIFICATIONS

SEED DITCH AS FOLLOWS:
GRASS SEED: PROVIDE FRESH, CLEAN, NEW-CROP SEED COMPLYING WITH TOLERANCE FOR PURITY AND GERMINATION ESTABLISHED BY OFFICIAL SEED ANALYSIS OF NORTH AMERICA.
PROVIDE SEED MIXTURE COMPOSED OF GRASS SPECIES AND PERCENTAGES BY WEIGHT AS FOLLOWS:

60 PERCENT INTERMEDIATE WHEAT
40 PERCENT SHEEP FESCUE

PROVIDE MIXTURE COMPOSED OF GRASS SEED AND FERTILIZER IN PERCENTAGES AS FOLLOWS:
GRASS SEED: 90 LBS. PER ACRE
FERTILIZER: 16-16-16 TIMED RELEASE COMPOSITION, 300 LBS. PER ACRE.
ALL SEEDING OF SLOPES SHALL BE DONE IN ACCORDANCE WITH THE W.S.D.O.T. 1991 STANDARD SPECIFICATIONS, SECTION 8-01. CONTRACTOR TO IRRIGATE SEEDED AREAS UNTIL SEED HAS GERMINATED AND HAS BEEN ACCEPTED BY SPOKANE COUNTY.

EROSION CONTROL SPECIFICATION TABLE

STATIONING	HYDROSEED	EROSION CONTROL BLANKET (BON TERRA PRODUCT "C2" OR EQUAL)	RIP-RAP, PER NOTE 4	RIP-RAP PAD WIDTH
	1+00 – 11+11 12+10 – 17+77	5+20 – 6+40 (120') 11+95 – 12+10 (15') 12+70 – 12+80 (10') 13+15 – 13+80 (65') 14+50 – 15+95 (145')	(RIP-RAP THICKNESS IS 1 FT.) 11+95 – 12+10 12+70 – 12+80 15+65 – 15+95	7' 7' 8'

NOTES:
1. DITCH LINE SHOULD FOLLOW NATURAL SLOPE WHERE POSSIBLE; MINIMUM ALLOWABLE SLOPE IN DITCH IS 1%, EXCEPT WHERE OTHERWISE SPECIFIED.
2. SEED ENTIRE DITCH AS DETAILED IN SEEDING SPECIFICATIONS.
3. PROVIDE EROSION CONTROL AS SPECIFIED IN TABLE.
4. QUARRY SPALLS GRADATION, PER WSDOT:

SIEVE SIZE	PERCENT PASSING
8"	100
3"	40 Max.
3/4"	10 Max.

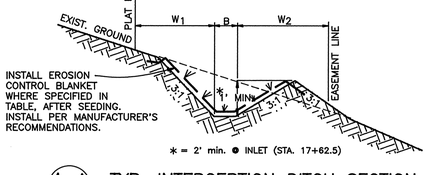

A-A 17 TYP. INTERCEPTION DITCH SECTION
N.T.S.

17/18

BY	REVISIONS	DATE	PROJ.	FROM	AS BUILT	TO	ACCEPT

GRADE ORDINANCE LIST				
FROM	TO	ORD. NO.	DATE	FILE NO.

DATUM		SCALE		DATE
TBM	SPIKE IN POWER POLE	HORIZONTAL	1"=50'	
ELEVATION	2469.48	VERTICAL	1"=10'	
LOCATION	SOUTH SIDE OF MELVILLE ROAD AT WEST TERRACE DRIVE			

DRAWN RAH
CHECKED
APPROVED

AC ADAMS & CLARK, Inc.
1720 W. Fourth Ave.
Spokane, Wa. 98204-1702
509-747-4600

WEST TERRACE FIRST ADDITION
INTERCEPTION DITCH ALONG EAST PLAT BOUNDARY

TYPE OF IMPROVEMENT: DRAINAGE
PROJECT NUMBER | PLAN NUMBER

CALL BEFORE YOU DIG 456-8000

3043DRLDWG 5/24/94

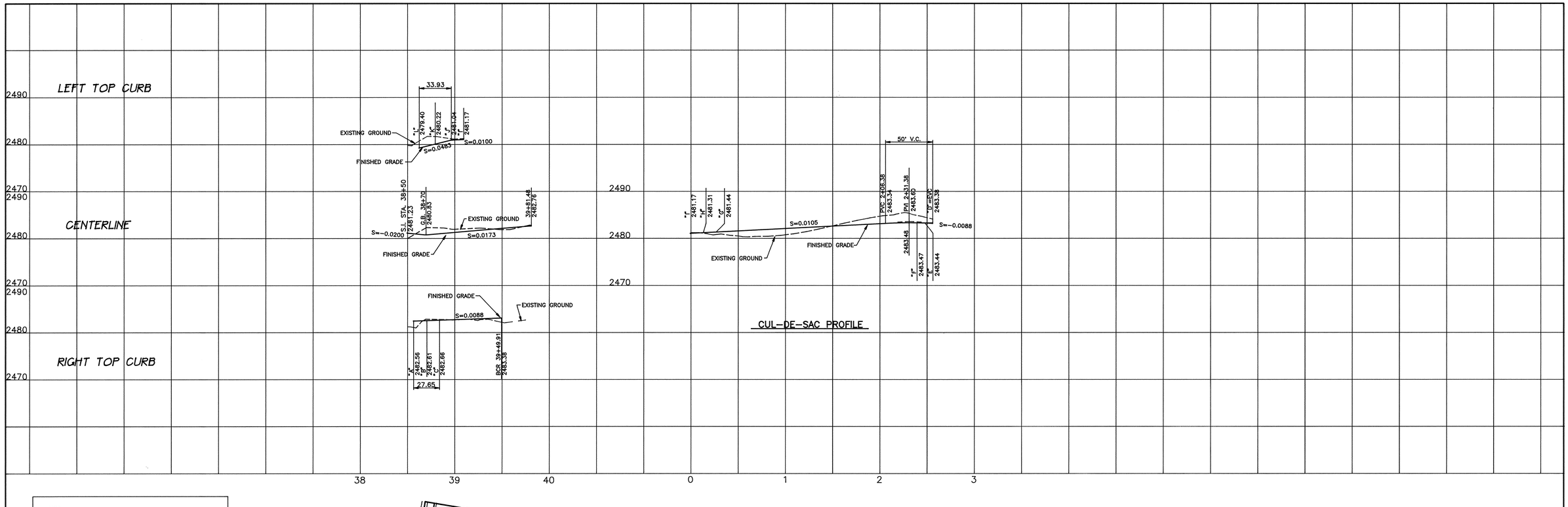

NOTE:
ALL WORK SHALL BE PERFORMED IN ACCORDANCE WITH 1991 STANDARD SPECIFICATIONS FOR ROAD, BRIDGE, AND MUNICIPAL CONSTRUCTION AS PROMULGATED JOINTLY BY SPOKANE COUNTY, THE WASHINGTON STATE DEPARTMENT OF TRANSPORTATION (WSDOT) AND THE AMERICAN PUBLIC WORKS ASSOCIATION (APWA) AND ALL AMENDMENTS HERETO.

NOTE:
ANY CONFLICTING UTILITIES SHALL BE RELOCATED PRIOR TO CONSTRUCTION

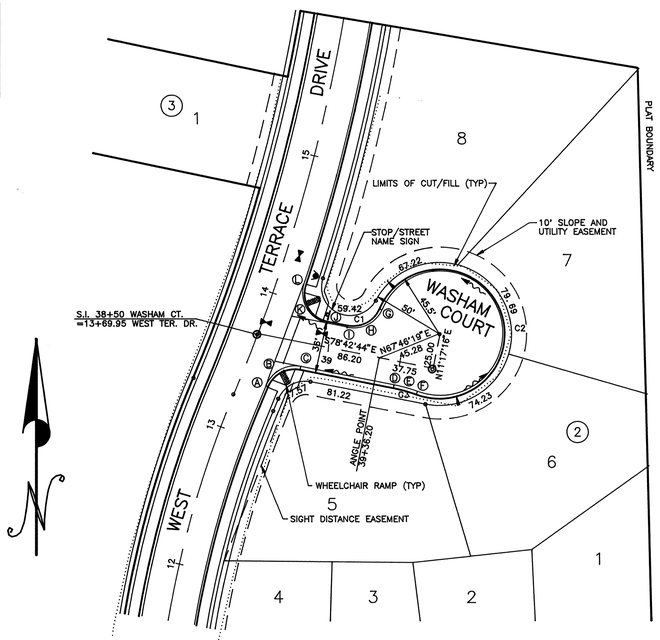

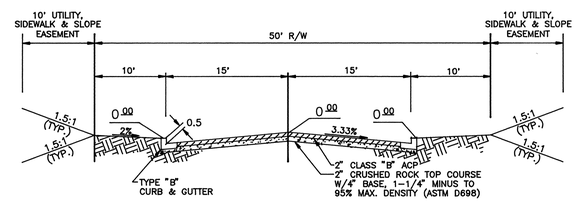

TYPICAL STREET SECTION
WASHAM COURT

CURB TABLE

LABEL	TYPE	STATION		
		W. TERRACE	WASHAM	CUL-DE-SAC
A	BCR	13+38.55		
B	MCR			
C	ECR		38+84.31	
D	BCR		39+49.91	2+56.38
E	MCR			2+48.08
F	ECR			2+39.78
G	ECR			0+27.26
H	MCR			0+13.63
I	BCR		39+09.85	0+00
J	BCR		38+96.49	
K	MCR			
L	ECR	14+13.98		

LEGEND

SEWER MANHOLE	○
WATER VALVE	
FIRE HYDRANT	
SIGN	
CURB LABELS	Ⓐ

CURVE DATA TABLE

CURVE	RADIUS	LENGTH	TANGENT	DELTA
C1	20.00'	27.26'	16.23'	78°06'21"
C2	45.50'	212.52'	47.43'	267°37'00"
C3	100.00'	16.60'	8.32'	9°30'39"

NOTE: CURVE DATA IS TO THE BACK OF CURB

RANDY L. LEBERE
STATE OF WASHINGTON
29860
REGISTERED
PROFESSIONAL ENGINEER
5/25/94
EXPIRES 9-3-95

APPROVED FOR CONSTRUCTION
SPOKANE COUNTY ENG.
BY 26 Jun 94

PERMIT REQUIRED!
NOTIFY THE PERMIT ENGINEER
456-3600
24 HRS. PRIOR TO CONSTRUCTION

16/18

DEVELOPER'S APPROVAL
GENERAL PARTNER 5/27/94

SEC. 7, T.24 N., R.42 E., W.M.

BY	REVISIONS	DATE	PROJ.	FROM	AS BUILT	TO	ACCEPT

GRADE ORDINANCE LIST

FROM	TO	ORD. NO.	DATE	FILE NO.

DATUM		SCALE		DATE	
TBM	SPIKE IN POWER POLE	HORIZONTAL	1"=50'		DRAWN SJS
ELEVATION	2469.46	VERTICAL	1"=10'		CHECKED
LOCATION	SOUTH SIDE OF HELVILLE ROAD AT WEST TERRACE DRIVE				APPROVED

AC ADAMS & CLARK, Inc.
1720 W. Fourth Ave.
Spokane, Wa. 99204-1702
509-747-4600

WEST TERRACE FIRST ADDITION
WASHAM COURT
WEST TERRACE DRIVE TO CUL-DE-SAC

TYPE OF IMPROVEMENT: STREET

PROJECT NUMBER	PLAN NUMBER
93-043	

CALL BEFORE YOU DIG 456-8000

5-23-94

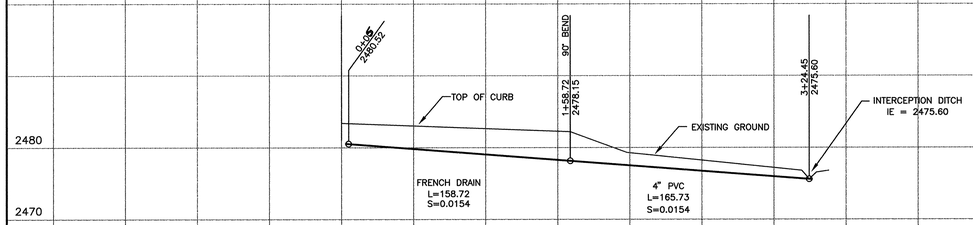

FRENCH DRAIN PROFILE

NTS

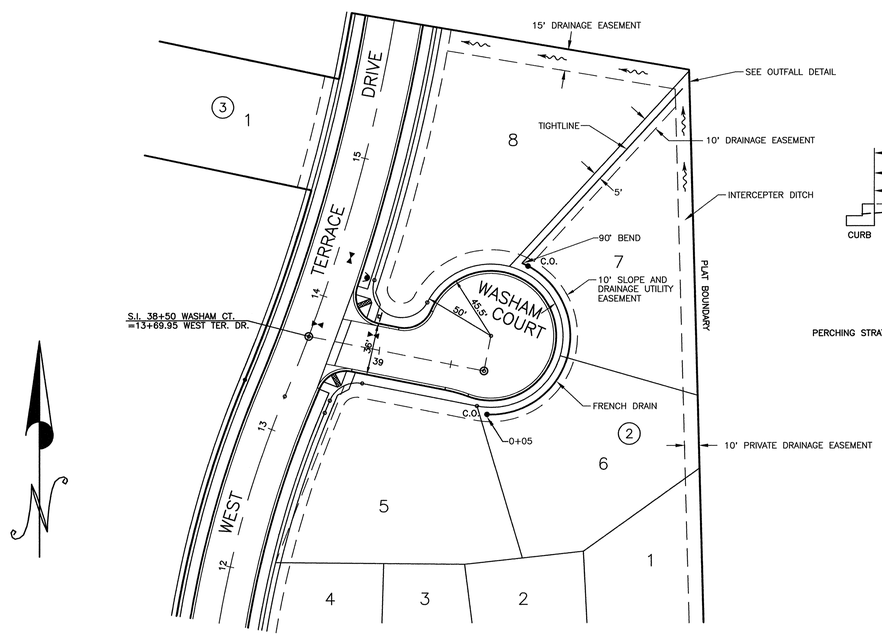

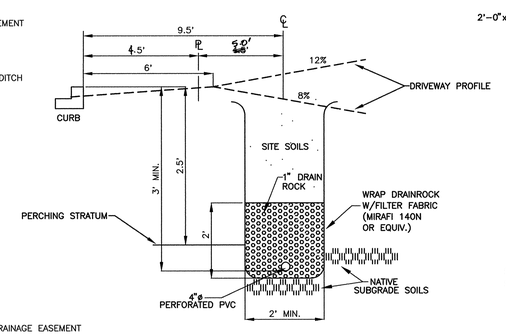

FRENCH DRAIN DETAIL

NTS

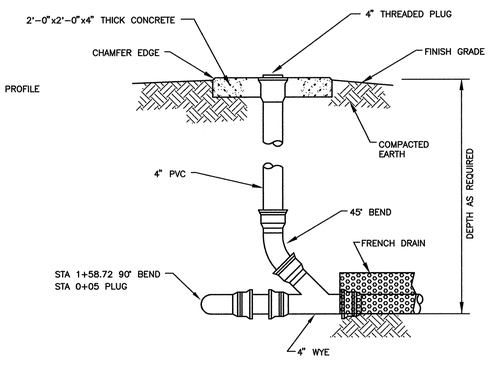

CLEANOUT DETAIL

NTS

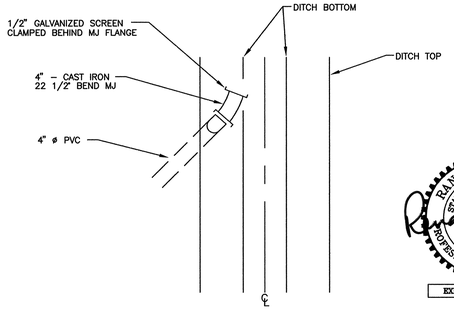

OUTFALL DETAIL

NTS

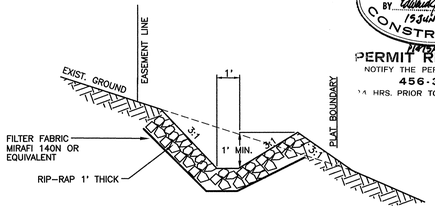

INTERCEPTION DITCH SECTION STA. 15+50 TO 17+62.5

N.T.S.

RANDY L. LaBARRE
STATE OF WASHINGTON
26660
REGISTERED PROFESSIONAL ENGINEER
EXPIRES 9-3-95

APPROVED FOR CONSTRUCTION
SPOKANE COUNTY ENG.
BY 15 JUN 95

PERMIT REQUIRED!
NOTIFY THE PERMIT ENGINEER
456-3600
24 HRS. PRIOR TO CONSTRUCTION

CALL BEFORE YOU DIG 456-8000

BY	REVISIONS	DATE	PROJ.	FROM	AS BUILT	TO	ACCEPT

BENCH MARK DATUM	SCALE	DATE	
TBM SPIKE N POWER POLE	HORIZONTAL 1"= 50'	05-95	DRAWN BH
ELEVATION 2469.98	VERTICAL 1"= 10'		CHECKED
LOCATION SOUTH SIDE OF MELVILLE ROAD AT WEST TERRACE DRIVE			APPROVED

AC

ADAMS & CLARK, Inc.
1720 W. Fourth Ave.
Spokane, Wa. 99204-1702
509-747-4600

WEST TERRACE FIRST ADDITION
FRENCH DRAIN
ALONG WASHAM COURT

TYPE OF IMPROVEMENT:	DRAINAGE
PROJECT NUMBER	PLAN NUMBER
93-043.4	

P:\93-043\3043ST6 Tue Jun 13 15:48:15 1995

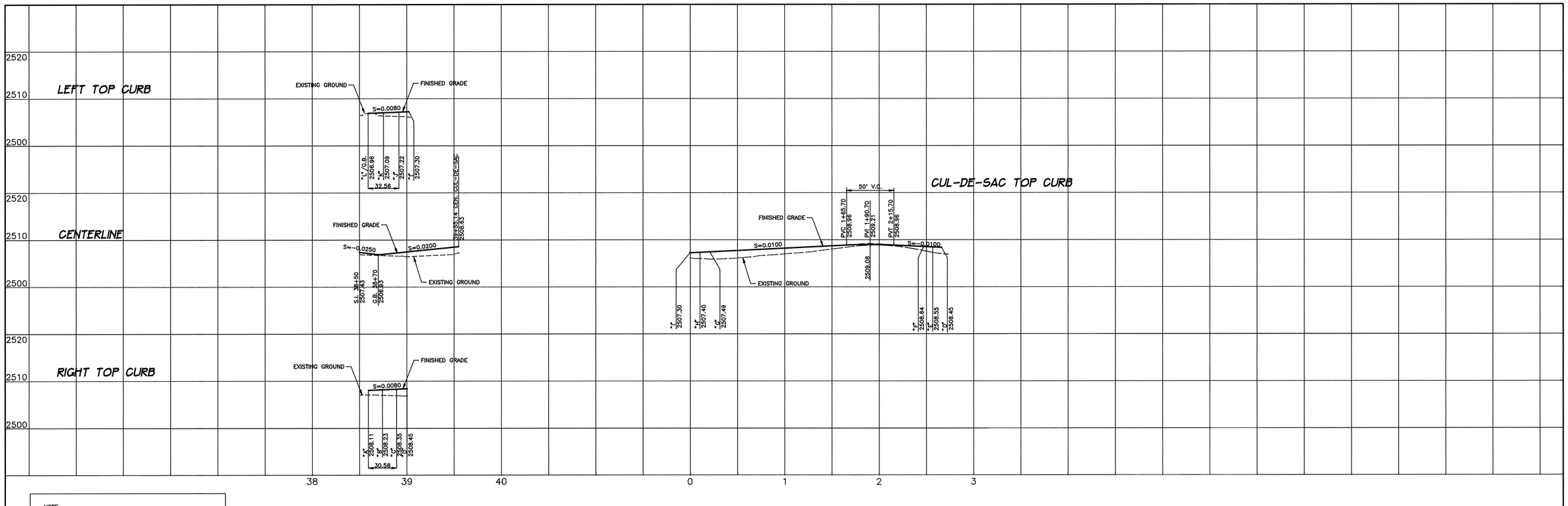

NOTE:
ALL WORK SHALL BE PERFORMED IN ACCORDANCE WITH 1991 STANDARD SPECIFICATIONS FOR ROAD, BRIDGE, AND MUNICIPAL CONSTRUCTION AS PROMULGATED JOINTLY BY SPOKANE COUNTY, THE WASHINGTON STATE DEPARTMENT OF TRANSPORTATION (WSDOT) AND THE AMERICAN PUBLIC WORKS ASSOCIATION (APWA) AND ALL AMENDMENTS HERETO.

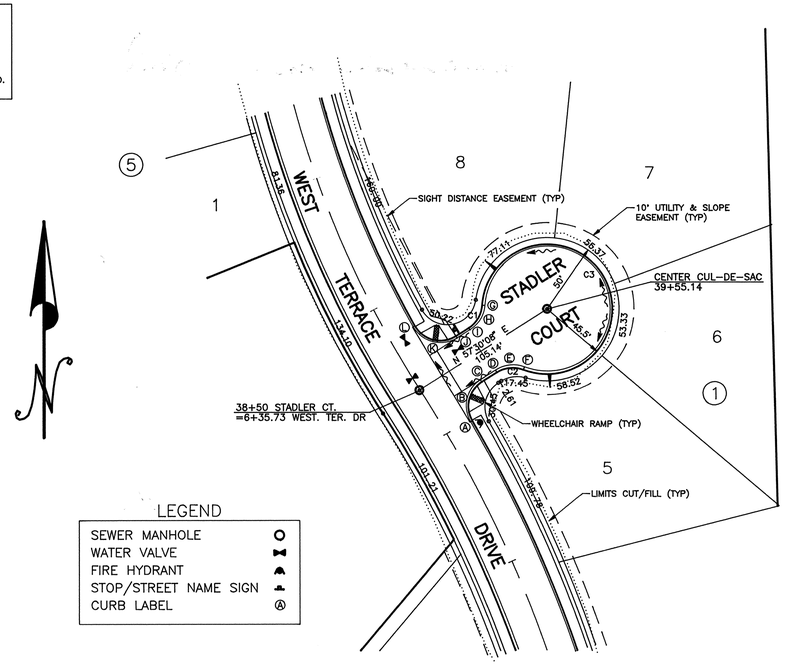

LEGEND

SEWER MANHOLE	○
WATER VALVE	
FIRE HYDRANT	
STOP/STREET NAME SIGN	
CURB LABEL	Ⓐ

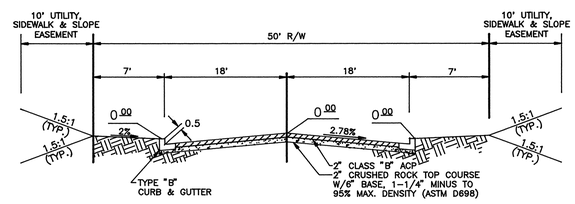

TYPICAL STREET SECTION
STADLER COURT

CURB TABLE

LABEL	TYPE	STATION		
		W. TERRACE	STADLER DR.	CUL-DE-SAC
A	BCR	5+98.91		
B	MCR			
C	ECR		38+89.69	
D	BCR		38+02.15	2+66.41
E	MCR			2+56.99
F	ECR			2+47.56
G	BCR			0+18.85
H	MCR			0+09.43
I	ECR		39+02.15	0+00
J	BCR		38+91.60	
K	MCR			
L	ECR	6+76.56		

CURVE DATA TABLE

CURVE	RADIUS	LENGTH	TANGENT	DELTA
C1	20.00'	18.85'	10.19'	54°00'00"
C2	20.00'	18.85'	10.19'	54°00'00"
C3	45.50'	228.71'	33.06'	287°59'59"

NOTE: CURVE DATA IS TO THE BACK OF CURB

NOTE:
ANY CONFLICTING UTILITIES SHALL BE RELOCATED PRIOR TO CONSTRUCTION

APPROVED FOR CONSTRUCTION
SPOKANE COUNTY ENG.
BY Edward J. Pickard Jr. 26 JUL 94

PERMIT REQUIRED!
NOTIFY THE PERMIT ENGINEER
456-3600
24 HRS. PRIOR TO CONSTRUCTION

RANDY L. PARKER
STATE OF WASHINGTON
26660
REGISTERED PROFESSIONAL ENGINEER
5/25/94
EXPIRES 9-3-95

DEVELOPER'S APPROVAL

14/18

SEC. 7, T.24 N., R.42 E., W.M.

BY	REVISIONS	DATE	PROJ.	FROM	AS BUILT	TO	ACCEPT

GRADE ORDINANCE LIST

FROM	TO	ORD. NO.	DATE	FILE NO.

DATUM		SCALE		DATE	
TBM	SPIKE IN POWER POLE	HORIZONTAL	1"=50'		DRAWN SJS
ELEVATION	2464.48	VERTICAL	1"=10'		CHECKED
LOCATION	SOUTH SIDE OF MELVILLE ROAD AT WEST TERRACE DRIVE				APPROVED

AC
ADAMS & CLARK, Inc.
1720 W. Fourth Ave.
Spokane, Wa. 99204-1702
509-747-4600

WEST TERRACE FIRST ADDITION
STADLER COURT
WEST TERRACE DRIVE TO CUL-DE-SAC

TYPE OF IMPROVEMENT: STREET

PROJECT NUMBER	PLAN NUMBER
93-043	

CALL BEFORE YOU DIG 456-8000

30A3STLDWG 5-23-94

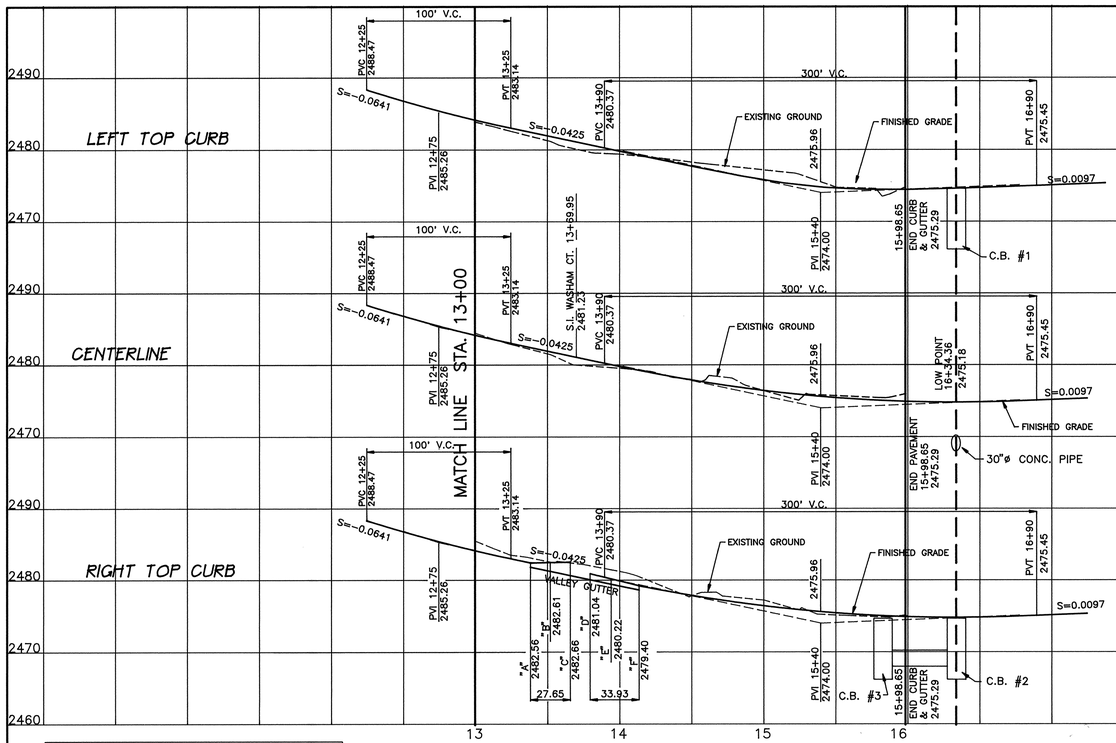

CATCH BASIN TABLE

C.B. #	STATION	OFFSET	T.O.G. EL.	PIPE INVERT
1	16+34.36	18.0' LT.	2474.51	2468.92
2	16+34.36	18.0' RT	2474.51	2469.32
3	15+89.50	18.0' RT.	2474.70	(N)2469.68 (E)2470.48

NOTE:
ALL WORK SHALL BE PERFORMED IN ACCORDANCE WITH 1991 STANDARD SPECIFICATIONS FOR ROAD, BRIDGE, AND MUNICIPAL CONSTRUCTION AS PROMULGATED JOINTLY BY SPOKANE COUNTY, THE WASHINGTON STATE DEPARTMENT OF TRANSPORTATION (WSDOT) AND THE AMERICAN PUBLIC WORKS ASSOCIATION (APWA) AND ALL AMENDMENTS HERETO.

LEGEND

- SEWER MANHOLE
- WATER VALVE
- FIRE HYDRANT
- SIGN
- CURB LABEL

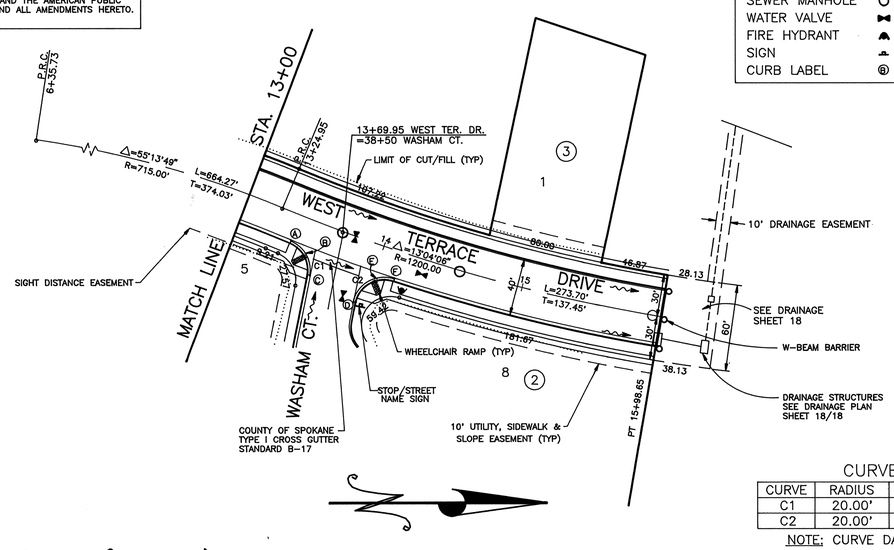

CURVE DATA TABLE

CURVE	RADIUS	LENGTH	TANGENT	DELTA
C1	20.00'	27.65'	16.55'	79°12'18"
C2	20.00'	33.93'	22.68'	97°11'37"

NOTE: CURVE DATA IS TO THE BACK OF CURB

NOTE:
ANY CONFLICTING UTILITIES SHALL BE RELOCATED PRIOR TO CONSTRUCTION

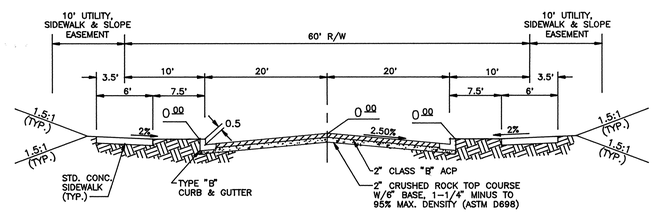

TYPICAL STREET SECTION
–WEST TERRACE DRIVE–

CURB TABLE

LABEL	TYPE	STATION W. TERRACE	STATION WASHAM
A	BCR	13+38.55	
B	MCR		
C	ECR		38+84.31
D	BCR		39+49.91
E	MCR		
F	ECR	14+13.98	

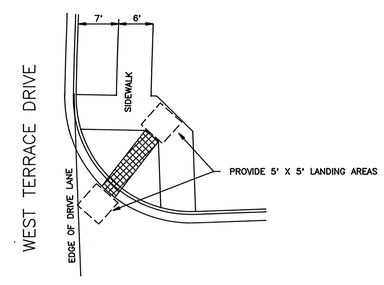

AMENDMENT TO THE STANDARD WHEELCHAIR RAMP

SHEET A-5 OF SPOKANE CO. DEPT. OF PUBLIC WORKS
NTS

RANDY L. BLACK — STATE OF WASHINGTON — 26880 — REGISTERED PROFESSIONAL ENGINEER — EXPIRES 9-3-95
5/25/94

APPROVED FOR CONSTRUCTION — SPOKANE COUNTY ENG. BY — 26 MAY 94

PERMIT REQUIRED!
NOTIFY THE PERMIT ENGINEER
456-3600
24 HRS. PRIOR TO CONSTRUCTION

DEVELOPER'S APPROVAL — GENERAL PARTNER 5/27/94

13/18

SEC. 7, T.24 N., R.42 E., W.M.

BY	REVISIONS	DATE	PROJ.	FROM	AS BUILT	TO	ACCEPT

GRADE ORDINANCE LIST

FROM	TO	ORD. NO.	DATE	FILE NO.

DATUM		SCALE		DATE	
TBM	SPIKE IN POWER POLE	HORIZONTAL	1"=50'		DRAWN SJS
ELEVATION	2469.98	VERTICAL	1"=10'		CHECKED
LOCATION	SOUTH SIDE OF MELVILLE ROAD AT WEST TERRACE DRIVE				APPROVED

AC — ADAMS & CLARK, Inc.
1720 W. Fourth Ave.
Spokane, Wa. 99204-1702
509-747-4600

WEST TERRACE FIRST ADDITION
WEST TERRACE DRIVE
STA. 13+00 TO STA 15+98.65

TYPE OF IMPROVEMENT: STREET

PROJECT NUMBER	PLAN NUMBER
93-043	

CALL BEFORE YOU DIG 456-8000

30ASTZLDWG 5-23-94

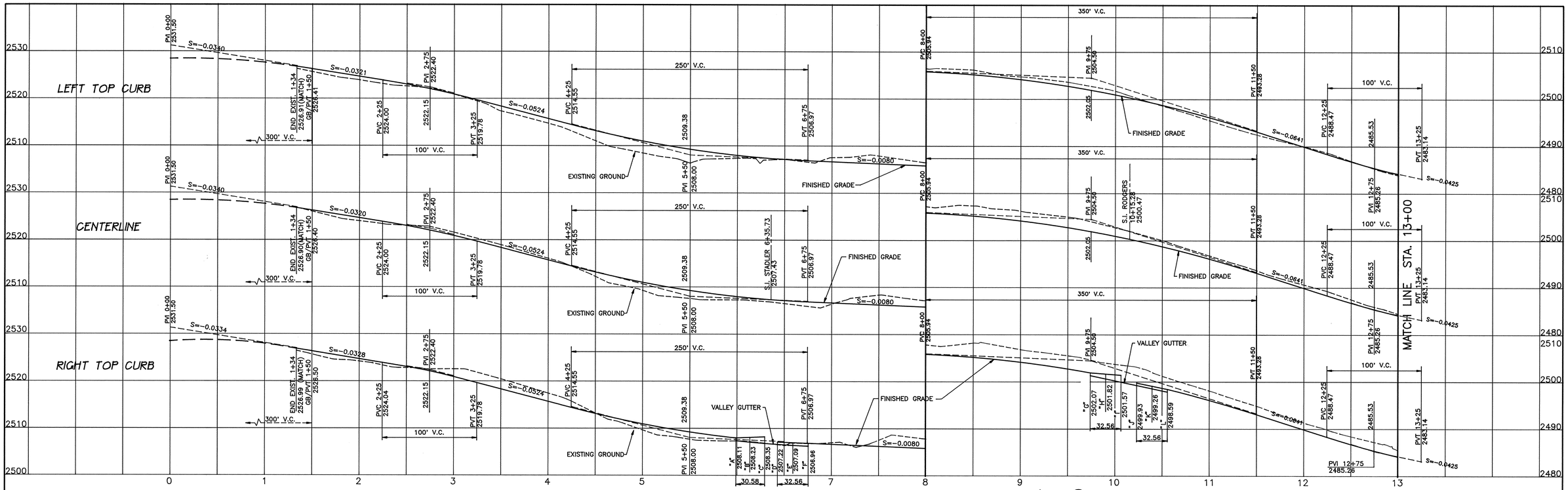

NOTE:
ALL WORK SHALL BE PERFORMED IN ACCORDANCE WITH 1991 STANDARD SPECIFICATIONS FOR ROAD, BRIDGE, AND MUNICIPAL CONSTRUCTION AS PROMULGATED JOINTLY BY SPOKANE COUNTY, THE WASHINGTON STATE DEPARTMENT OF TRANSPORTATION (WSDOT) AND THE AMERICAN PUBLIC WORKS ASSOCIATION (APWA) AND ALL AMENDMENTS HERETO.

DEVELOPER'S APPROVAL

NOTE:
ANY CONFLICTING UTILITIES SHALL BE RELOCATED PRIOR TO CONSTRUCTION

LEGEND

SEWER MANHOLE	
WATER VALVE	
FIRE HYDRANT	
SIGN	
CURB LABEL	

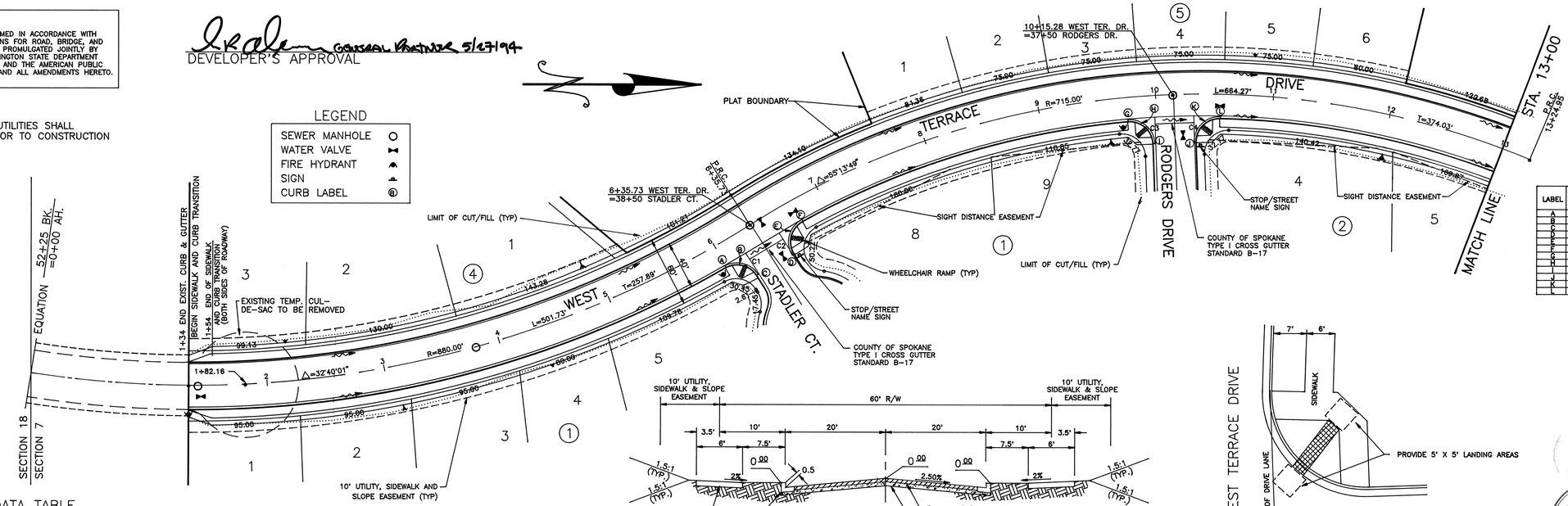

CURB TABLE

LABEL	TYPE	STATION W. TERRACE	STADLER DR.	RODGER CT.
A	BCR	5+98.91		
B	MCR			
C	BCR		38+89.69	
D	BCR		37+91.60	
E	MCR			
F	MCR			
G	BCR	6+76.56		
H	BCR	9+74.44		
I	MCR			
J	BCR			37+91.60
K	BCR			37+91.60
L	ECR	10+56.11		

CURVE DATA TABLE

CURVE	RADIUS	LENGTH	TANGENT	DELTA
C1	20.00'	30.58'	19.18'	86°36'11"
C2	20.00'	32.56'	21.18'	93°16'20"
C3	20.00'	32.56'	21.18'	93°16'20"
C4	20.00'	32.56'	21.18'	93°16'20"

NOTE: CURVE DATA IS TO THE BACK OF CURB

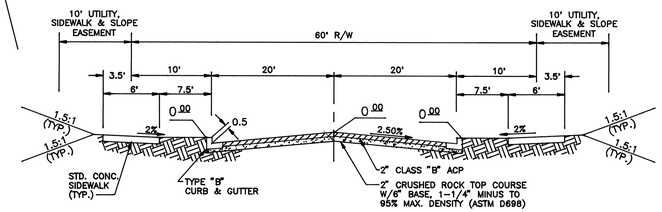

TYPICAL STREET SECTION
—WEST TERRACE DRIVE—

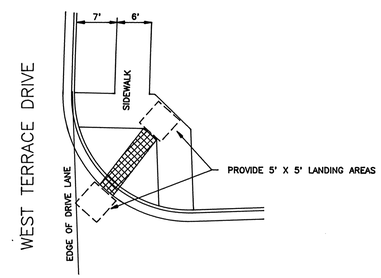

AMENDMENT TO THE STANDARD WHEELCHAIR RAMP
SHEET A-5 OF SPOKANE CO. DEPT. OF PUBLIC WORKS
NTS

EXPIRES 9-3-95

APPROVED FOR CONSTRUCTION
SPOKANE COUNTY ENG.

PERMIT REQUIRED!
NOTIFY THE PERMIT ENGINEER
456-3600
24 HRS. PRIOR TO CONSTRUCTION

12/18

SEC. 7, T.24 N., R.42 E., W.M.

BY	REVISIONS	DATE	PROJ.	FROM	AS BUILT	TO	ACCEPT

GRADE ORDINANCE LIST

FROM	TO	ORD. NO.	DATE	FILE NO.

DATUM		SCALE		DATE
TBM	SPIKE IN POWER POLE	HORIZONTAL	1"=50'	
ELEVATION	2464.48	VERTICAL	1"=10'	
LOCATION	SOUTH SIDE OF MELVILLE ROAD AT WEST TERRACE DRIVE			

DRAWN SJS
CHECKED
APPROVED

ADAMS & CLARK, Inc.
1720 W. Fourth Ave.
Spokane, Wa. 99204-1702
509-747-4600

WEST TERRACE FIRST ADDITION
WEST TERRACE DRIVE
STA. 0+00 TO STA 13+00

TYPE OF IMPROVEMENT: STREET
PROJECT NUMBER 93-043
PLAN NUMBER

CALL BEFORE YOU DIG 456-8000

30-43STT.DWG 5-23-94

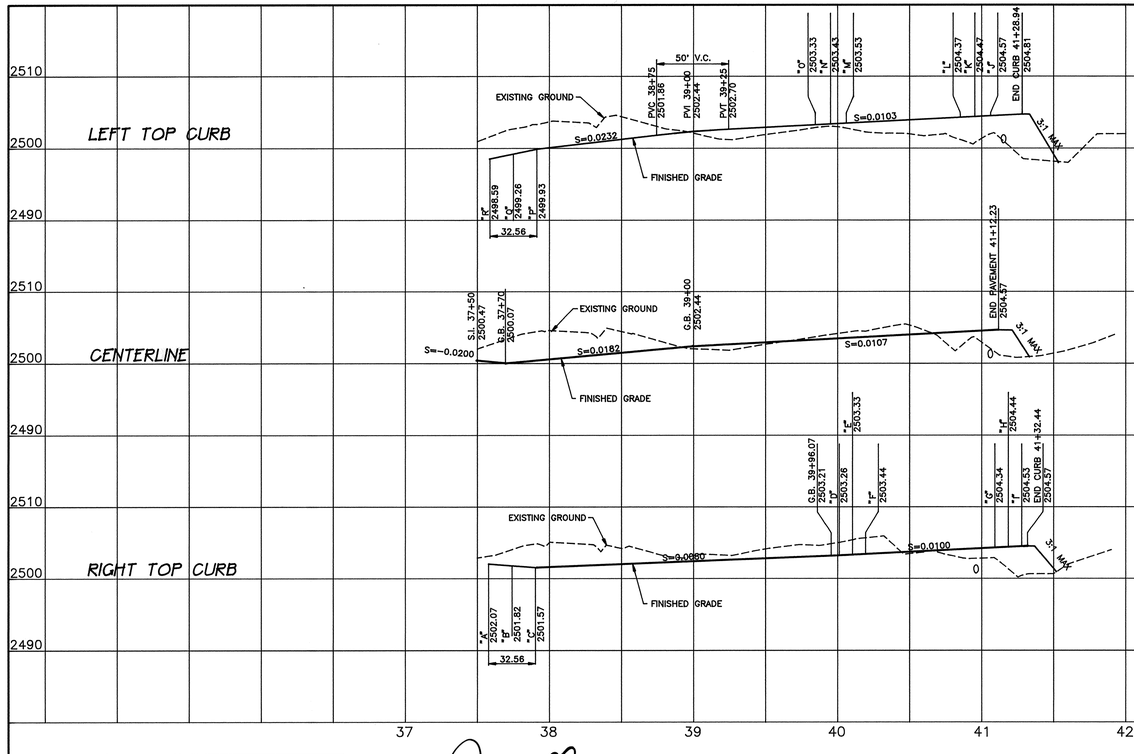

NOTE: TEMPORARY CUL-DE-SAC STATIONING IS BASED ON CURB LENGTH.

NOTE:
ALL WORK SHALL BE PERFORMED IN ACCORDANCE WITH 1991 STANDARD SPECIFICATIONS FOR ROAD, BRIDGE, AND MUNICIPAL CONSTRUCTION AS PROMULGATED JOINTLY BY SPOKANE COUNTY, THE WASHINGTON STATE DEPARTMENT OF TRANSPORTATION (WSDOT) AND THE AMERICAN PUBLIC WORKS ASSOCIATION (APWA) AND ALL AMENDMENTS HERETO.

General Partner 5/27/94.
DEVELOPER'S APPROVAL

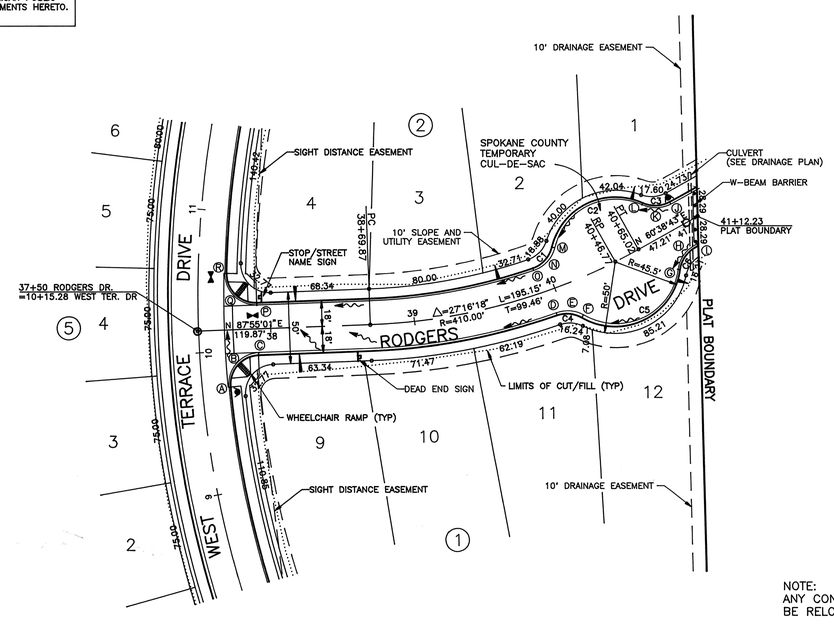

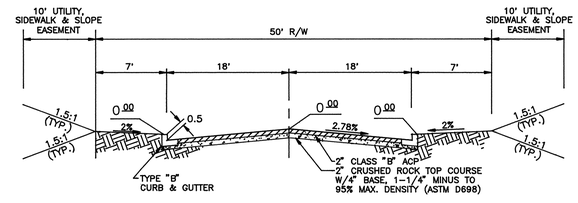

TYPICAL STREET SECTION
—RODGERS DRIVE—

CURB TABLE

LABEL	TYPE	STATION W. TERRACE	STATION RODGER CT.
A	BCR	9+74.44	
B	MCR		
C	ECR		37+91.60
D	BCR		40+01.77
E	MCR		40+10.59
F	ECR		40+19.41
G	BCR		41+09.73
H	MCR		41+19.08
I	ECR		41+28.42
J	ECR		41+05.91
K	MCR		40+96.41
L	BCR		40+86.91
M	ECR		40+05.83
N	MCR		39+95.71
O	BCR		39+85.59
P	ECR		37+91.60
Q	MCR		
R		10+56.11	

LEGEND

SEWER MANHOLE	○
WATER VALVE	⊠
FIRE HYDRANT	
SIGN	
CURB LABEL	Ⓐ

CURVE DATA TABLE

CURVE	RADIUS	LENGTH	TANGENT	DELTA
C1	20.00'	20.24'	11.08'	57°59'19"
C2	45.50'	81.07'	56.28'	102°05'28"
C3	20.00'	19.00'	10.29'	54°26'15"
C4	20.00'	17.64'	9.44'	50°32'13"
C5	45.50'	90.32'	69.71'	113°43'53"
C6	20.00'	18.70'	10.09'	53°33'35"

NOTE: CURVE DATA IS TO THE BACK OF CURB

NOTE:
ANY CONFLICTING UTILITIES SHALL BE RELOCATED PRIOR TO CONSTRUCTION

Randy L. LeBrun 5/25/94
RANDY L. LeBRUN — STATE OF WASHINGTON — 26660 — REGISTERED PROFESSIONAL ENGINEER
EXPIRES 9-3-95

APPROVED FOR CONSTRUCTION
SPOKANE COUNTY ENG.
BY Richard A. Penny Jr. P.E. 26 May 94

PERMIT REQUIRED!
NOTIFY THE PERMIT ENGINEER
456-3600
24 HRS. PRIOR TO CONSTRUCTION

15
18

SEC. 7, T.24 N., R.42 E., W.M.

BY	REVISIONS	DATE	PROJ.	FROM	AS BUILT	TO	ACCEPT

GRADE ORDINANCE LIST

FROM	TO	ORD. NO.	DATE	FILE NO.

DATUM		SCALE		DATE	
TBM	SPIKE IN POWER POLE	HORIZONTAL	1"=50'		DRAWN SJS
ELEVATION	2469.98	VERTICAL	1"=10'		CHECKED
LOCATION	SOUTH SIDE OF HELVILLE ROAD AT WEST TERRACE DRIVE				APPROVED

AC
ADAMS & CLARK, Inc.
1720 W. Fourth Ave.
Spokane, Wa. 99204-1702
509-747-4600

WEST TERRACE FIRST ADDITION
RODGERS DRIVE
WEST TERRACE DRIVE TO STA 41+12.23

TYPE OF IMPROVEMENT: STREET
PROJECT NUMBER: 93-043
PLAN NUMBER:

CALL BEFORE YOU DIG 456-8000

3043STLONG 5-23-94