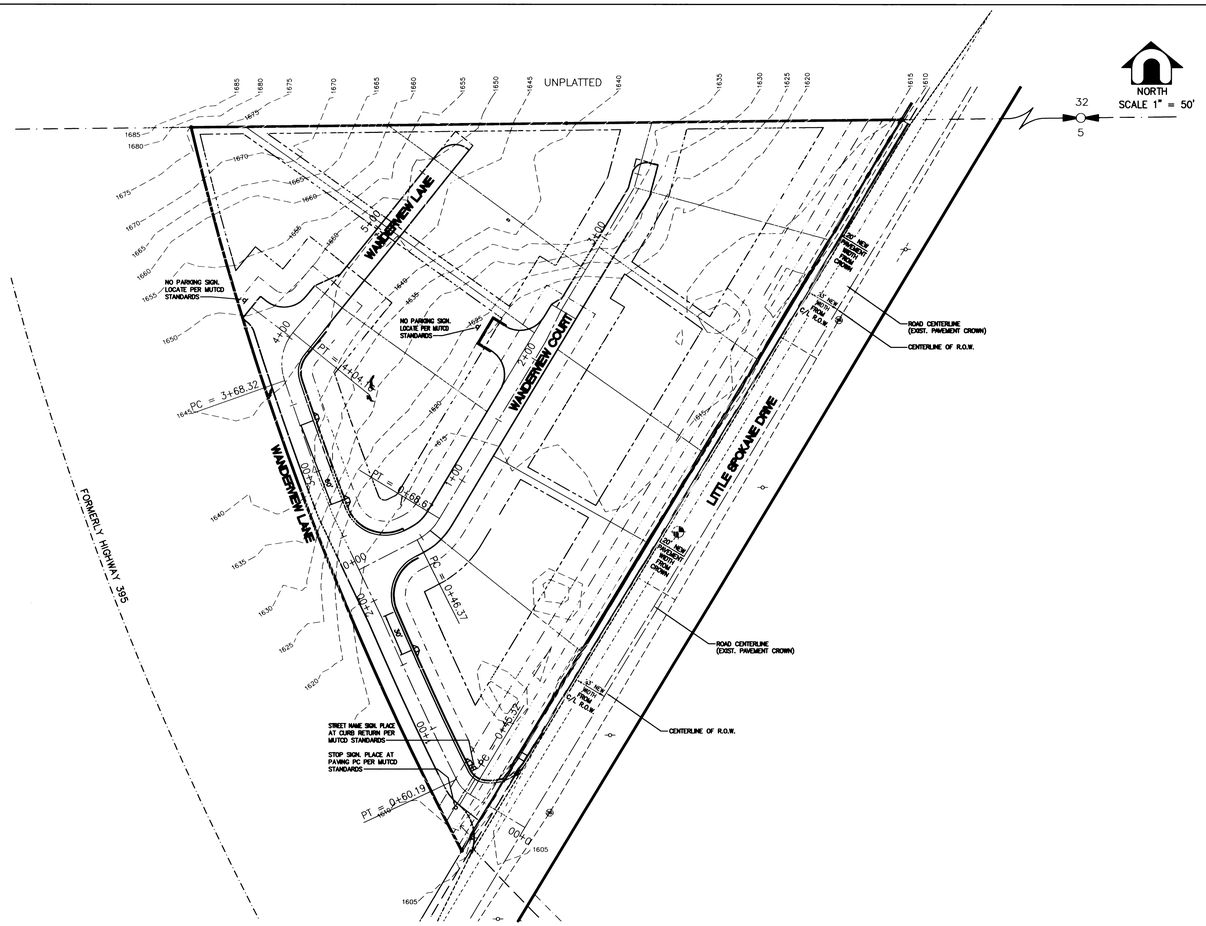

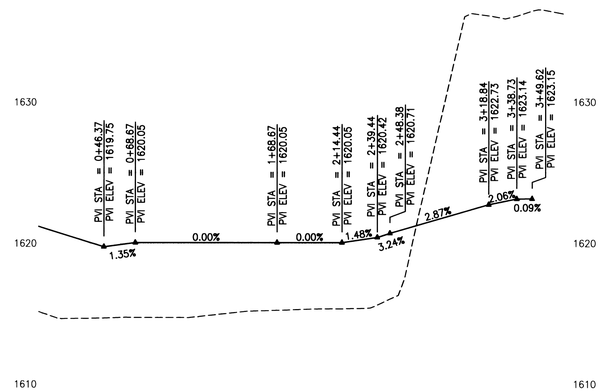

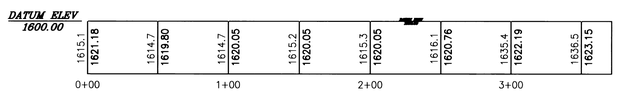

WANDERVIEW COURT PROFILE
HORIZONTAL SCALE: 1" = 50'
VERTICAL SCALE: 1" = 5'

SPOKANE COUNTY ENGINEERS OFFICE
OFFICIAL PUBLIC DOCUMENT ORIGINAL
CONSTRUCTION PLANS
PRIVATE ROADS
PROJECT #: P-1862
DATE ACCEPTED: 06-05-00
ACCEPTANCE EXPIRES: 06-05-02
PROJECT LANE MILES: .125
CONSTRUCTION DOCUMENTATION AND CERTIFIED RECORD DRAWINGS, "AS BUILTS" ARE REQUIRED PRIOR TO RELEASE OF INSPECTION BOND.
APPROACH PERMIT REQUIRED! (509) 477-3600
PRIOR TO CONSTRUCTION

DEVELOPER'S APPROVAL
By: [signature] Date: 5-25-2000

CALL BEFORE YOU DIG: 509-456-8000

WANDERVIEW COURT PLAN/PROFILE
WANDERVIEW ESTATES
14103 N. LITTLE SPOKANE DRIVE
SPOKANE COUNTY, WASHINGTON

WALTER LAWRENCE OLSON
STATE OF WASHINGTON
REGISTERED PROFESSIONAL ENGINEER
5/25/00
EXPIRES: JAN. 6, 2001

REVISIONS	APPD.

DRAWING NO. C4.2
SCALE: AS NOTED
DATE: MARCH, 2000
PROJECT: JTSD0002
FILE NAME: C42
DESIGN: WLO - CSL
DRAWN: DCJ - WES
CHECKED: WLO
REVISION NUMBER:

JTSD0002 DCJ 05/24/00 15:12:30 DCJ P:\JTSD0001\AUTOCAD\C42.dwg

P.1862 Eng. Road & Drainage

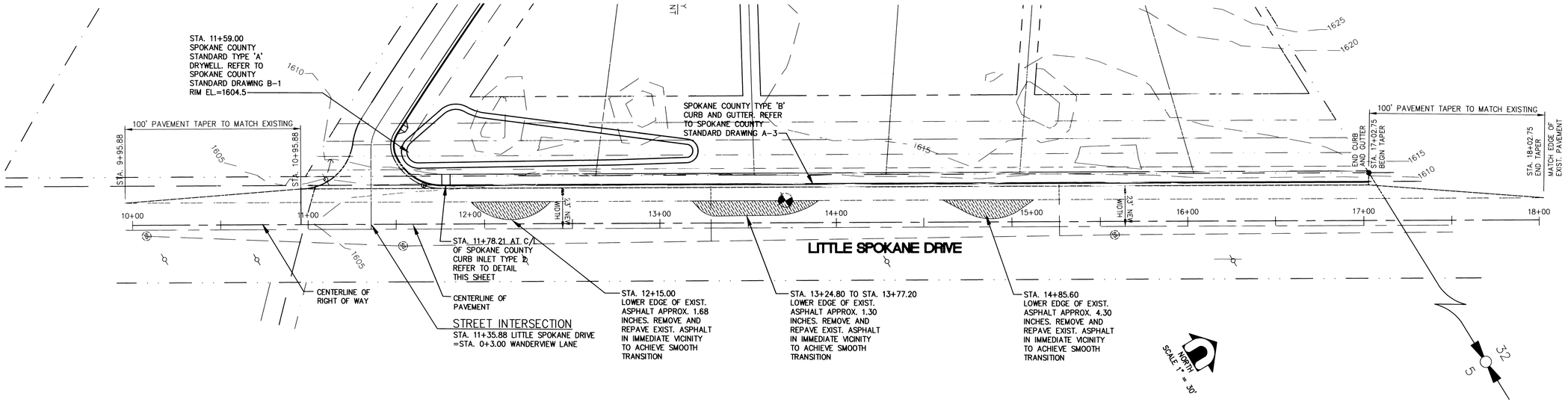

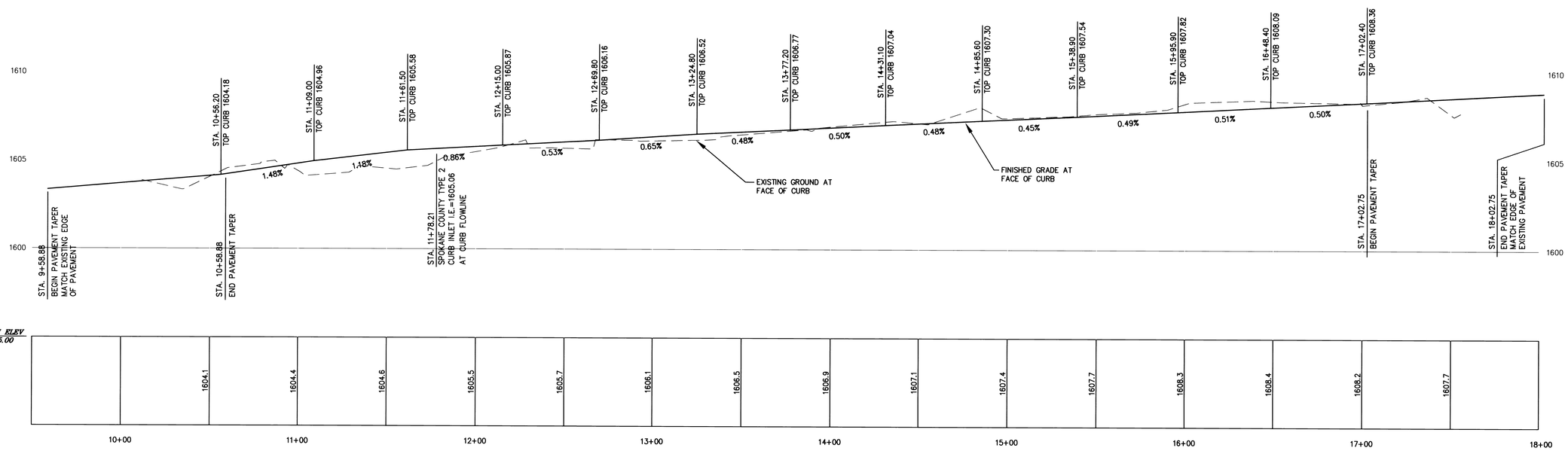

PROFILE LITTLE SPOKANE DRIVE

HORIZONTAL SCALE: 1" = 30'
VERTICAL SCALE: 1" = 3'

GENERAL NOTES

1. CURB INLET SHALL BE CONSTRUCTED IN ACCORDANCE WITH ASTM C 478 (AASHTO M 199) & ASTM C 890 UNLESS OTHERWISE SHOWN ON PLANS OR NOTED IN THE PROJECT SPECIAL PROVISIONS.
2. TOP SURFACE TO BE BROOM FINISHED.
3. ALL EXTERNAL EDGES NOT LABELED SHALL BE TROWELLED WITH 1/4" RADIUS EDGER.

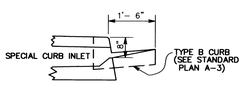

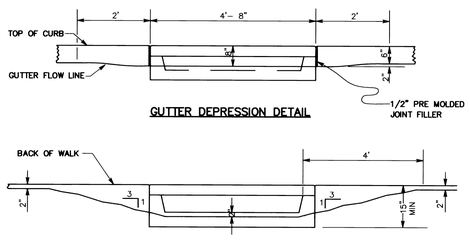

GUTTER DEPRESSION DETAIL

TYPICAL CURB INLET TYPE 2
NOT TO SCALE

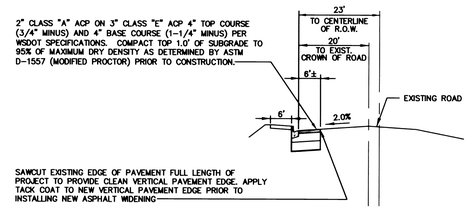

TYPICAL CROSS SECTION
NOT TO SCALE

SPOKANE COUNTY ENGINEERS OFFICE
OFFICIAL PUBLIC DOCUMENT ORIGINAL
CONSTRUCTION PLANS
PROJECT #: P-1862
DATE ACCEPTED: 06-05-00
ACCEPTANCE EXPIRES: 06-05-02
PROJECT LANE MILES PUBLIC: 0
PROJECT LANE MILES PRIVATE:
CONSTRUCTION DOCUMENTATION AND CERTIFIED RECORD DRAWINGS, "AS-BUILTS" ARE REQUIRED PRIOR TO COUNTY ACCEPTANCE AND ESTABLISHMENT OF THE ROADS AND DRAINAGE FACILITIES FOR MAINTENANCE.
PERMIT REQUIRED! (509) 477-3600
NOTIFY PERMIT ENGINEER 2 BUSINESS DAYS PRIOR TO CONSTRUCTION

DEVELOPER'S APPROVAL
By: _____ Date: 5-25-2000

CALL BEFORE YOU DIG: 509-456-8000

LITTLE SPOKANE DRIVE PLAN AND PROFILE
WANDERVIEW ESTATES
14103 N. LITTLE SPOKANE DRIVE
SPOKANE COUNTY, WASHINGTON

LAWRENCE W. OLSON
STATE OF WASHINGTON
PROFESSIONAL ENGINEER
EXPIRES: JAN. 6, 2001

			APPD.
			REVISIONS

DRAWING NO. C4.3
SCALE: AS NOTED
DESIGN: WLO - CSL
DATE: MARCH, 2000
DRAWN: DCJ - WES
PROJECT: JTSD0002
CHECKED: WLO
FILE NAME: C43
REVISION NUMBER:

JTSD0002 DCJ 05/24/00 15:16:25 DCJ P:\JTSD0001\AUTOCAD\C43.dwg

P-1862 Eng. Road-Drainage

WANDERVIEW ESTATES

A DUPLEX DIVISION FOR JTS DEVELOPMENT

A PORTION OF THE NORTHWEST ONE QUARTER OF SECTION 5, TOWNSHIP 26 NORTH, RANGE 43 EAST, W.M., SPOKANE COUNTY, WASHINGTON

GENERAL NOTES

1. CONSTRUCTION METHODS AND MATERIALS SHALL BE IN ACCORDANCE WITH THE LATEST EDITION OF THE STANDARD SPECIFICATIONS FOR ROAD, BRIDGE, AND MUNICIPAL CONSTRUCTION (WSDOT) AS JOINTLY PROMULGATED BY THE WASHINGTON STATE DEPARTMENT OF TRANSPORTATION AND THE AMERICAN PUBLIC WORKS ASSOCIATION, AND SUPPLEMENTAL SPECIFICATIONS AS ADOPTED BY THE COUNTY OF SPOKANE.

2. NO CONSTRUCTION SHALL BE STARTED WITHOUT APPROVED PLANS. ANY CONSTRUCTION PERFORMED WITHOUT APPROVED PLANS WILL BE REJECTED AND WILL BE AT THE CONTRACTOR'S RISK. THE CONTRACTOR SHALL NOTIFY THE COUNTY 48 HOURS PRIOR TO COMMENCING WORK.

3. THE CONTRACTOR SHALL VERIFY DIMENSIONS AND ELEVATIONS IN THE FIELD. ANY DISCREPANCIES SHALL BE BROUGHT TO THE ATTENTION OF THE OWNER AND ENGINEER. ALL GRADING SHALL BE PERFORMED IN ACCORDANCE WITH CHAPTER 33 AND APPENDIX TO CHAPTER 33 OF THE 1997 UBC, AND TO THE REQUIREMENTS OF THE COUNTY OF SPOKANE. IN THE CASE OF CONFLICT BETWEEN THE PRECEDING REQUIREMENTS AND THESE PLANS, THE MORE STRINGENT SHALL GOVERN. ALL GRADING OPERATIONS SHALL ALSO CONFORM TO THE GEOTECHNICAL ENGINEERING EVALUATION AS PREPARED BY BUDINGER AND ASSOCIATES, DATED MAY 21, 1999.

4. THE CONTRACTOR SHALL BE RESPONSIBLE TO BE FAMILIAR WITH ACTUAL SITE CONDITIONS AND FACTORS AFFECTING THE WORK. CONTRACTOR AGREES THAT HE SHALL ASSUME SOLE AND COMPLETE RESPONSIBILITY FOR THE JOB SITE DURING THE COURSE OF THE PROJECT, INCLUDING THE SAFETY OF ALL PERSONS AND PROPERTY; THAT THIS REQUIREMENT SHALL APPLY CONTINUOUSLY AND NOT BE LIMITED TO NORMAL WORKING HOURS; AND THAT THE CONTRACTOR SHALL DEFEND, INDEMNIFY, AND HOLD THE ENGINEER AND OWNER HARMLESS FROM ANY AND ALL LIABILITY; REAL OR ALLEGED, IN CONNECTION WITH THE PERFORMANCE OF WORK ON THIS PROJECT, EXCEPTING FOR LIABILITY ARISING FROM THE SOLE NEGLIGENCE OF THE OWNER OR ENGINEER, OR THIRD PARTY IN VIOLATION OF THE LAW OR IN TRESPASS. THE CONTRACTOR SHALL PRACTICE SAFETY AT ALL TIMES AND SHALL FURNISH, ERECT, AND MAINTAIN, SUCH FENCES, BARRICADES, LIGHTS, AND SIGNS NECESSARY TO GIVE ADEQUATE PROTECTION TO THE PUBLIC AT ALL TIMES.

5. CONTRACTOR SHALL KEEP A SET OF THE APPROVED PROJECT DRAWINGS ON THE JOBSITE WHENEVER CONSTRUCTION IS IN PROGRESS. RECORD INFORMATION SHALL BE PLACED ON THESE DRAWINGS NOTING DEVIATIONS FROM THE PLANS IN THE LOCATION, SIZE, TYPE, AND SCOPE OF WORK WHICH IS CONSTRUCTED.

6. LOCATIONS OF EXISTING UTILITIES SHOWN ON THE PLANS ARE APPROXIMATE. IT SHALL BE THE RESPONSIBILITY OF THE CONTRACTOR TO CONTACT THE "CALL BEFORE YOU DIG NUMBER" 509-456-8000 FOR LOCATION OF POWER, TELEPHONE, OIL AND NATURAL GAS UNDERGROUND FACILITIES. THE CONTRACTOR SHALL ALSO CONTACT THE APPROPRIATE AGENCY FOR THE LOCATION OF CABLE TV, WATER, SEWER, DRAINAGE, OR OTHER UNDERGROUND FACILITIES. ANY CONFLICTING UTILITIES SHALL BE RELOCATED PRIOR TO CONSTRUCTION.

7. CONTRACTOR SHALL MAINTAIN DUST CONTROL AT ALL TIMES, IN ACCORDANCE WITH ALL LOCAL, STATE AND FEDERAL REGULATIONS.

8. THE CONTRACTOR SHALL BE RESPONSIBLE TO MAINTAIN TRAFFIC CONTROL AT ALL TIMES. ALL TRAFFIC CONTROL DEVICES AND LABOR SHALL BE THE RESPONSIBILITY OF THE CONTRACTOR.

9. PLAN INTENT: THESE DRAWINGS REPRESENT THE FINISHED FACILITIES AND UNLESS OTHERWISE INDICATED, THEY DO NOT SHOW THE METHOD OF CONSTRUCTION. THE CONTRACTOR SHALL PROVIDE ALL MEASURES NECESSARY TO PRODUCE THE FINISHED FACILITIES AND TO PROTECT THE WORK AND PROPERTY, THE SAFETY OF WORKMAN, AND OTHER PERSONS DURING CONSTRUCTION. THE CONTRACTOR IS SOLELY RESPONSIBLE FOR THE ABOVE MEASURES AND VISITS TO THE SITE BY THE ENGINEER SHALL NOT INCLUDE OBSERVATION OF SAFETY MEASURES.

10. COMPACTION TESTS SHALL BE MADE ON SUBGRADE MATERIAL AND OTHER MATERIAL AS SPECIFIED HEREIN. SAID TESTS SHALL BE MADE PRIOR TO THE PLACING OF THE NEXT MATERIAL.

11. EXTERIOR GRADES ADJACENT TO BUILDING DOORS SHALL BE EQUAL TO THE BUILDING FINISH FLOOR ELEVATION.

12. ALL CUT AND FILL SLOPES SHALL BE NO STEEPER THAN 2 HORIZONTAL TO 1 VERTICAL UNLESS SPECIFICALLY STATED OTHERWISE.

13. ORGANIC MATTER SHALL BE REMOVED FROM THE SURFACE UPON WHICH FILL IS TO BE PLACED. THE SURFACE SHALL THEN BE PLOWED OR SCARIFIED UNTIL THE SURFACE IS FREE FROM RUTS, OR OTHER UNEVEN FEATURES WHICH WOULD TEND TO PREVENT UNIFORM COMPACTION BY THE EQUIPMENT TO BE USED.

14. FOR ANY CURB GRADES LESS THAN 0.8% (0.008 ft./ft.) A WASHINGTON STATE-LICENSED PROFESSIONAL LAND SURVEYOR SHALL VERIFY THAT THE CURB FORMS ARE AT THE GRADES NOTED ON THE APPROVED PLANS, PRIOR TO PLACEMENT OF CURB MATERIAL. THE CONTRACTOR IS RESPONSIBLE FOR ARRANGING AND COORDINATING WORK WITH THE PROFESSIONAL LAND SURVEYOR.

EROSION CONTROL NOTES

1. APPROVAL OF THE EROSION CONTROL ELEMENT DOES NOT CONSTITUTE AN APPROVAL OF PROPOSED ROAD, STORM DRAINAGE, GRADING OR UTILITY DESIGN.

2. IMPLEMENTATION, CONSTRUCTION, MAINTENANCE, REPLACEMENT AND UPGRADING OF ALL EROSION CONTROL MEASURES IS THE RESPONSIBILITY OF THE CONTRACTOR UNTIL ALL CONSTRUCTION IS COMPLETED AND ACCEPTED BY SPOKANE COUNTY, OR UNTIL VEGETATION IS ESTABLISHED THROUGHOUT THE SITE, AND ACCEPTED BY SPOKANE COUNTY, WHICHEVER IS LATER.

3. THE EROSION CONTROL FACILITIES MUST BE CONSTRUCTED IN CONJUNCTION WITH ALL CLEARING AND GRADING ACTIVITIES TO ENSURE THAT SEDIMENT-LADEN WATER DOES NOT ENTER THE DRAINAGE SYSTEM, VIOLATE APPLICABLE WATER STANDARDS, OR LEAVE THE SITE.

4. THE EROSION CONTROL MEASURES SPECIFIED ARE THE MINIMUM REQUIRED FOR THE ANTICIPATED SITE CONDITIONS. DURING THE CONSTRUCTION PERIOD, THE CONTRACTOR SHALL INSPECT, MAINTAIN AND UPGRADE ALL EROSION CONTROL FACILITIES AS NEEDED FOR UNEXPECTED STORM EVENTS TO PREVENT SEDIMENT-LADEN WATER FROM LEAVING THE SITE. CONTRACTOR IS REQUIRED TO PERFORM NECESSARY STREET CLEANING SHOULD SEDIMENT-LADEN WATER AND/OR DISTURBED SOIL FROM THE SITE ENTER THE STREET ADJACENT TO THE PROJECT.

5. ALL EROSION CONTROL FACILITIES SHALL BE INSPECTED DAILY BY THE CONTRACTOR AND MAINTAINED AS NECESSARY TO ENSURE THEIR CONTINUED FUNCTIONING.

6. DURING INACTIVE PERIODS ON THE SITE, THE CONTRACTOR MUST INSPECT AND MAINTAIN EROSION CONTROL FACILITIES ONCE A MONTH OR WITHIN THE 48 HOURS FOLLOWING A STORM EVENT.

7. GEOTEXTILE FILTER FABRIC SHALL BE PLACED UNDER THE GRATES OF NEWLY INSTALLED CATCH BASINS AND DRYWELLS UNTIL SUCH TIME THAT VEGETATION ON SITE IS ESTABLISHED AND PAVING OPERATIONS ARE COMPLETE. ALL CATCH BASINS, DRYWELLS, AND CONVEYANCE LINES SHALL BE CLEANED PRIOR TO PAVING. THE CLEANING OPERATION SHALL NOT FLUSH SEDIMENT-LADEN WATER INTO THE DOWNSTREAM SYSTEM.

8. STABILIZED CONSTRUCTION ENTRANCES SHALL BE INSTALLED AT THE BEGINNING OF CONSTRUCTION AND SHALL BE MAINTAINED FOR THE DURATION OF THE PROJECT. ADDITIONAL MEASURES MUST BE TAKEN BY THE CONTRACTOR, IF NECESSARY, TO ENSURE THAT ALL EXISTING PAVED AREAS ARE KEPT CLEAN FOR THE DURATION OF THE PROJECT.

9. SEED, MULCH, AND FERTILIZE ALL DISTURBED GROUND NOT RECEIVING HARD SURFACE AT THE EARLIEST POSSIBLE TIME.

DEVELOPER'S APPROVAL

By: [signature] **Date:** 5-25-2000

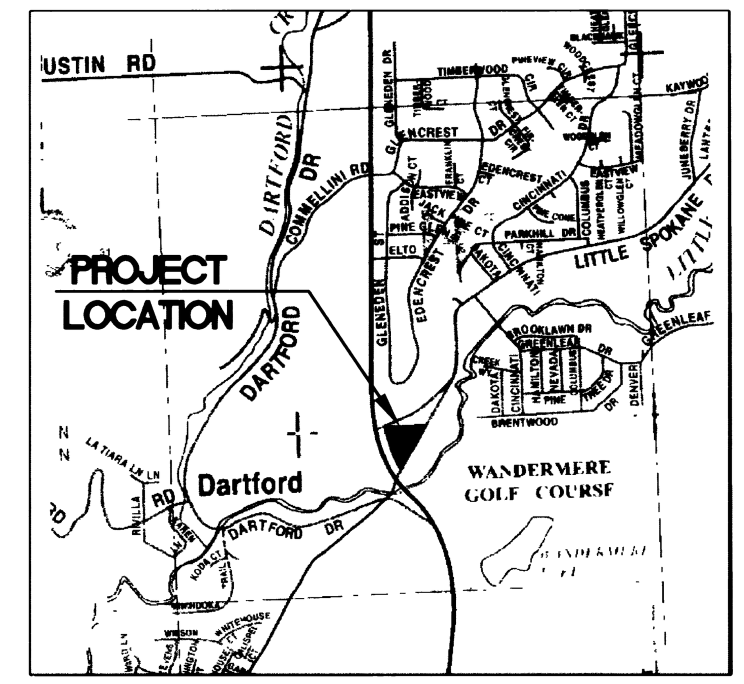

VICINITY MAP

NO SCALE

NORTH

ABBREVIATIONS

ACP	ASPHALTIC CONCRETE PAVING
A.D.	ALGEBRAIC DIFFERENCE
AR	AIR RELEASE ASSEMBLY
BCR	BEGIN CURB RETURN
BM	BENCH MARK
BO	BLOW OFF ASSEMBLY
BOP	BEGINNING OF PROJECT
BV	BALL VALVE
BVC	BEGIN VERTICAL CURVE
BVCS	BEGINNING OF VERTICAL CURVE STATION
BOW, B/W	BACK OF WALL
BW	BOTTOM OF WALL
CB	CATCH BASIN
C/L	CENTERLINE
CL	CLASS
CMP	CORRUGATED METAL PIPE
C.O.	CLEANOUT
CY	CUBIC YARD
△	DELTA (ANGLE)
DI	DUCTILE IRON
EA	EACH
EAS	EASEMENT
EC	END CURVE
ECR	END CURB RETURN
EL	ELEVATION
ELEC	ELECTRICAL
EP	EDGE OF PAVEMENT
EVC	END VERTICAL CURVE
EVCE	END OF VERTICAL CURVE ELEVATION
EVCS	END OF VERTICAL CURVE STATION
EX, EXIST.	EXISTING
EG	EXISTING GROUND
FD	FOUND
FF	FINISHED FLOOR
FG	FINISH GRADE
FH	FIRE HYDRANT ASSEMBLY
FL	FLOW LINE
FM	FORCE MAIN
FS	FINISH SURFACE
FT	FEET
FUT	FUTURE
G	GAS
GA	GAGE
GAL	GALLON
GB	GRADE BREAK
GPD	GALLONS PER DAY
GPM	GALLONS PER MINUTE
HC	HANDICAP
HP	HORSE POWER
GV	GATE VALVE
HC	HANDICAP
HP, HI-PT	HIGH POINT
HP	HORSE POWER
K	RATE OF VERTICAL CURVATURE (LENGTH FT. PER PERCENT OF ALGEBRAIC GRADE DIFFERENCE)
ID	INSIDE DIAMETER
IE	INVERT ELEVATION
IN	INLET
L	LENGTH
LT	LEFT
M	METER
MAX	MAXIMUM
MIN	MINIMUM
MISC	MISCELLANEOUS
MH	MANHOLE
NTS	NOT TO SCALE
OC	ON CENTER
OD	OUTSIDE DIAMETER
OHP	OVERHEAD POWER
OUT	OUTLET
PC	POINT OF CURVATURE
PCC	PORTLAND CEMENT CONCRETE
PCVC	POINT OF COMPOUND VERTICAL CURVE
PVI	POINT OF VERTICAL INTERSECTION CURVE
PRC	POINT OF REVERSE CURVE
PP	POWER POLE
PRV	PRESSURE REGULATING VALVE
PRVC	POINT OF REVERSE VERTICAL CURVE
PSF	POUND PER SQUARE FOOT
PSI	POUND PER SQUARE INCH
PT	POINT, POINT OF TANGENCY
PUE	PUBLIC UTILITY EASEMENT
PVC	POLYVINYL CHLORIDE
R	RADIUS
RAD	RADIAL
RD	ROAD
RCP	REINFORCED CONCRETE PIPE
REQD	REQUIRED
RSP	ROCK SLOPE PROTECTION
RT	RIGHT
R/W	RIGHT OF WAY
RET WALL	RETAINING WALL
SS	SANITARY SEWER
S	SLOPE, SIDE SEWER SERVICE
SCH	SCHEDULE
SD	STORM DRAIN
SHT	SHEET
SPEC	SPECIFICATIONS
STA	STATION
STD	STANDARD
STL	STEEL
SW	SIDEWALK
TEL	TELEPHONE
TB	THRUST BLOCK
TB	TOP OF BANK
TBC	TOP BACK CURB
TBM	TEMPORARY BENCH MARK
TOE	TOE OF SLOPE
TV	CABLE TELEVISION
TW	TOP OF WALL
TYP	TYPICAL
U	COMMON TRENCH UTILITIES
UTL	UTILITY
VC	VERTICAL CURVE
VCP	VITRIFIED CLAY PIPE
VERT	VERTICAL
W	WATER
W/	WITH
W/O	WITHOUT
WM	WATER METER
WS	WATER SERVICE
WS	WATER SURFACE
WW	WET WELL
WWF	WELDED WIRE FABRIC

INDEX OF SHEETS

C1.1 NOTES, LEGEND, INDEX SHEET
C2.1 SITE PLAN
C3.1 GRADING, DRAINAGE AND EROSION CONTROL PLAN
C4.1 WANDERVIEW LANE PLAN AND PROFILE
C4.2 WANDERVIEW COURT PLAN AND PROFILE
C4.3 LITTLE SPOKANE DRIVE PLAN AND PROFILE
C5.1 UTILITY PLAN
C6.1 WATER PROFILES
C7.1 SEWER PROFILES
C8.1 CIVIL DETAILS

LEGEND

PROPOSED		DESCRIPTION
C.O.		SEWER CLEANOUT
M.H.		SEWER MANHOLE
		FIRE HYDRANT
SD		STORM DRAIN MANHOLE
		DRYWELL
		CATCH BASIN
		GATE VALVE
		UTILITY POLE
		GUY WIRE
		SIGN POST
OHP		OVERHEAD POWER LINE
P-T		UNDERGROUND POWER & TELEPHONE LINE
TV		TELEVISION LINE
SD		STORM DRAIN
SS		SANITARY SEWER
		WATER
G		GAS
		TEMPORARY BENCH MARK
		PROPERTY LINE
		CENTERLINE
SS		SERVICE LATERAL (SS=SEWER, W=WATER) (SD=STORM DRAIN)
		EASEMENT
		FENCE
1	N/A	NOTE REFERENCE
		WATER METER
		HAND HOLE
		JUNCTION BOX
		TRANSFORMER
A.R.		AIR RELEASE VALVE
B.O.		BLOWOFF ASSEMBLY
		CAP
		LIGHT POLE
N/A		TREE DECIDUOUS
N/A		TREE EVERGREEN
		CULVERT
		DRAINAGE PATH
		NEW ASPHALT PAVEMENT
		SAWCUT LINE
		THRUST BLOCK

SPOKANE COUNTY ENGINEERS OFFICE
OFFICIAL PUBLIC DOCUMENT ORIGINAL
CONSTRUCTION PLANS
PROJECT #: P-1862
DATE ACCEPTED: 06-05-00
ACCEPTANCE EXPIRES: 06-05-02
PROJECT LANE MILES PUBLIC: 0
PROJECT LANE MILES PRIVATE:
CONSTRUCTION DOCUMENTATION AND CERTIFIED RECORD DRAWINGS ARE REQUIRED PRIOR TO COUNTY ACCEPTANCE OF THE ROADS

THE DESIGN IMPROVEMENTS SHOWN IN THIS SET OF PLANS CONFORM TO THE APPLICABLE EDITIONS OF THE SPOKANE COUNTY STANDARDS FOR ROAD AND SEWER CONSTRUCTION AND THE SPOKANE COUNTY GUIDELINES FOR STORMWATER MANAGEMENT. ALL DESIGN DEVIATIONS HAVE BEEN APPROVED BY THE SPOKANE COUNTY ENGINEER. I APPROVE THESE PLANS FOR CONSTRUCTION:

WALTER LAWRENCE OLSON — STATE OF WASHINGTON — 28290 — REGISTERED PROFESSIONAL ENGINEER [signature] 5/25/00

EXPIRES: JAN 6, 2001

CALL BEFORE YOU DIG: 509-456-8000

NOTES, LEGEND AND INDEX SHEET
WANDERVIEW ESTATES
14103 N. LITTLE SPOKANE DRIVE
SPOKANE COUNTY, WASHINGTON

DEA INC
DAVID EVANS AND ASSOCIATES, INC
WEST 110 CATALDO
SPOKANE, WA. 99201 (509) 327-8697

REVISIONS	APPD.

DRAWING NO.	C1.1
SCALE: AS NOTED	DESIGN: CSL
DATE: FEBRUARY, 2000	DRAWN: KRM
PROJECT: JTSD0002	CHECKED: WLO
FILE NAME: SHEET1	REVISION NUMBER

JTSD0002 DCJ 05/24/00 14:13:18 DCJ P:\JTSD0001\AUTOCAD\COVER1.dwg

P-1862 Eng. Road & Drainage

A PORTION OF THE NORTHWEST ONE QUARTER OF SECTION 5, TOWNSHIP 26 NORTH, RANGE 43 EAST, W.M., SPOKANE COUNTY, WASHINGTON

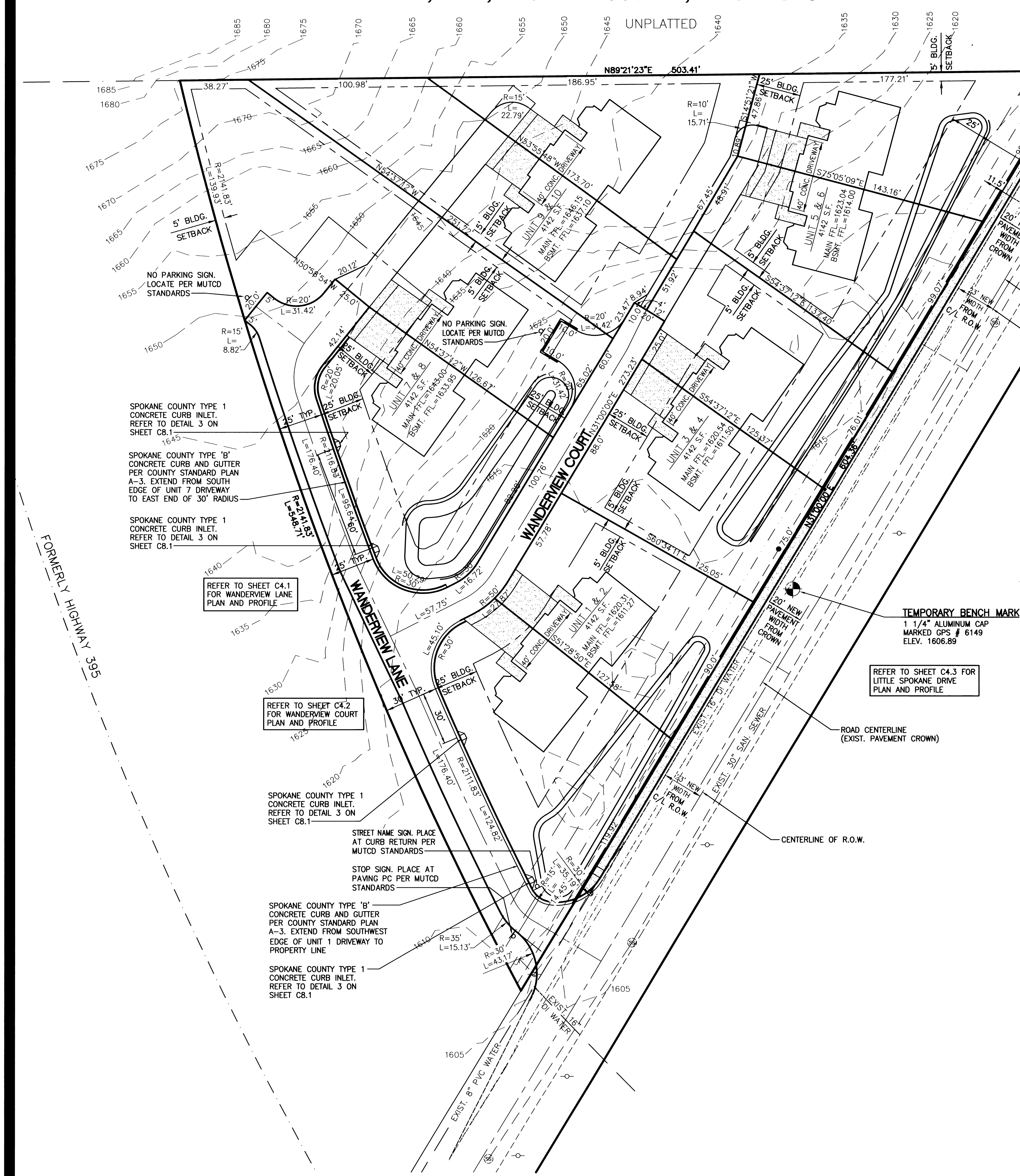

BUILDING CORNER COORDINATE TABLE

	N.W. CORNER	N.E. CORNER	S.W. CORNER	S.E. CORNER
UNIT 1 & 2	N 9718.45 E 10137.74	N 9696.09 E 10165.80	N 9639.38 E 10074.75	N 9617.02 E 10102.81
UNIT 3 & 4	N 9856.01 E 10219.81	N 9979.84 E 10303.34	N 9773.56 E 10161.32	N 9752.80 E 10190.58
UNIT 5 & 6	N 9989.04 E 10268.66	N 9696.09 E 10165.80	N 9891.33 E 10242.74	N 9882.13 E 10277.42
UNIT 7 & 8	N 9886.47 E 10064.74	N 9865.77 E 10094.04	N 9803.89 E 10006.43	N 9783.20 E 10035.73
UNIT 9 & 10	N 9984.28 E 10139.59	N 9963.16 E 10168.59	N 9902.57 E 10080.07	N 9881.45 E 10109.07

SPOKANE COUNTY ENGINEERS OFFICE
OFFICIAL PUBLIC DOCUMENT ORIGINAL
CONSTRUCTION PLANS
PROJECT #: P-1862
DATE ACCEPTED: 06-05-00
ACCEPTANCE EXPIRES: 06-05-02
PROJECT LANE MILES PUBLIC: 0
PROJECT LANE MILES PRIVATE:
CONSTRUCTION DOCUMENTATION AND CERTIFIED RECORD DRAWINGS, "AS-BUILTS" ARE REQUIRED PRIOR TO COUNTY ACCEPTANCE AND ESTABLISHMENT OF THE ROADS AND DRAINAGE FACILITIES FOR MAINTENANCE.
PERMIT REQUIRED! (509) 477-3600
NOTIFY PERMIT ENGINEER 2 BUSINESS DAYS PRIOR TO CONSTRUCTION

FIRE DISTRICT NO. 9
APPROVED BY: Douglas M Bluker
DATE: 5-30-00

DEVELOPER'S APPROVAL
By: [signature] **Date:** 5-25-2000

CALL BEFORE YOU DIG: 509-456-8000

SITE PLAN
WANDERVIEW ESTATES
14103 N. LITTLE SPOKANE DRIVE
SPOKANE COUNTY, WASHINGTON

DEA
DAVID EVANS AND ASSOCIATES, INC
WEST 110 CATALDO
SPOKANE, WA. 99201 (509) 327-8697

WALTER LAWRENCE OLSON, STATE OF WASHINGTON, REGISTERED PROFESSIONAL ENGINEER, 25890
5/25/00
EXPIRES: JAN. 6, 2001

REVISIONS				APPD.

C2.1 OF SHEETS

SCALE: AS NOTED	DESIGN: WLO		
DATE: MARCH, 2000	DRAWN: DCJ		
PROJECT: JTSD0002	CHECKED: WLO		
FILE NAME: SHEET2	REVISION NUMBER:		

JTSD0002 DCJ 05/24/00 14:29:27 DCJ P:\JTSD0001\AUTOCAD\SHEET2.dwg

P.1862 Eng. Road+Drainage

A PORTION OF THE NORTHWEST ONE QUARTER OF SECTION 5, TOWNSHIP 26 NORTH, RANGE 43 EAST, W.M., SPOKANE COUNTY, WASHINGTON

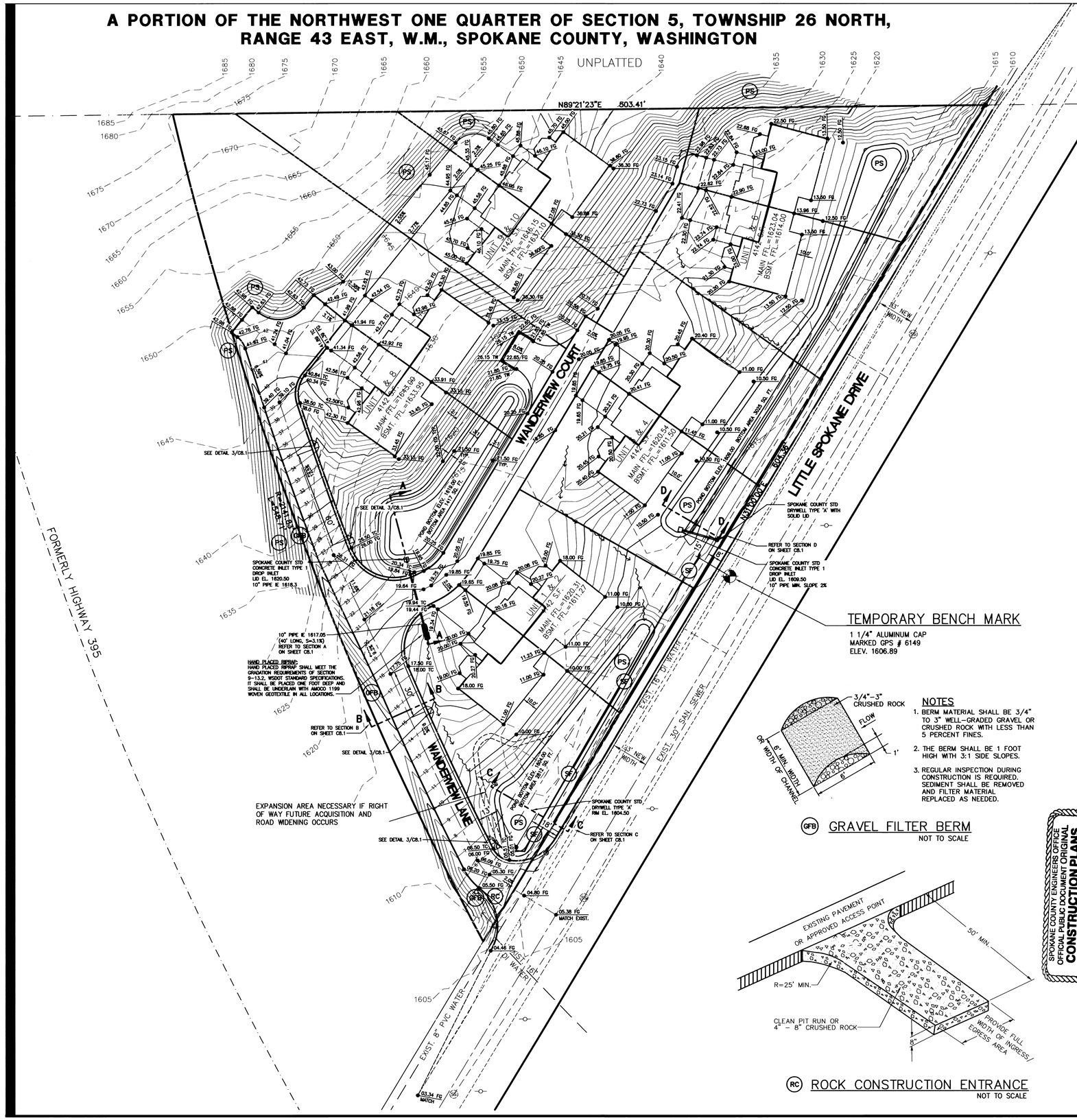

NOTE:
MATCH EXISTING EDGE OF PAVEMENT AT END OF TAPER

NORTH
SCALE 1" = 30'

TEMPORARY BENCH MARK

1 1/4" ALUMINUM CAP
MARKED GPS # 6149
ELEV. 1606.89

NOTES

1. BERM MATERIAL SHALL BE 3/4" TO 3" WELL-GRADED GRAVEL OR CRUSHED ROCK WITH LESS THAN 5 PERCENT FINES.
2. THE BERM SHALL BE 1 FOOT HIGH WITH 3:1 SIDE SLOPES.
3. REGULAR INSPECTION DURING CONSTRUCTION IS REQUIRED. SEDIMENT SHALL BE REMOVED AND FILTER MATERIAL REPLACED AS NEEDED.

(GFB) GRAVEL FILTER BERM

NOT TO SCALE

(RC) ROCK CONSTRUCTION ENTRANCE

NOT TO SCALE

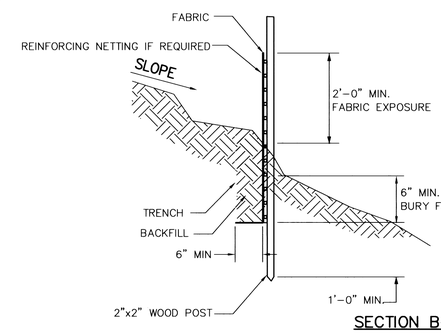

NOTES:

1. INSTALLATION SHALL FOLLOW THE MANUFACTURER'S RECOMMENDATIONS.
2. POSTS SHALL BE INSTALLED SO THAT A MIN. OF 3'-0" EXTENDS ABOVE THE GROUND WITH A MIN. OF 2'-0" EMBEDMENT.
3. FILTER FABRIC SHALL BE PURCHASED IN A CONTINUOUS ROLL TO AVOID JOINTS.
4. SPLICE JOINTS AT SUPPORT POSTS ONLY, WITH A MIN. 6" OVERLAP.

SECTION B-B

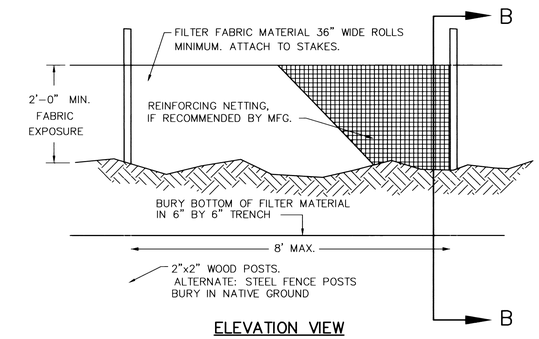

ELEVATION VIEW

(SF) FILTER FENCE

NOT TO SCALE

(PS) PERMANENT SEEDING

1. PERMANENT SEEDING IS TO BE ESTABLISHED IN ANY DISTURBED AREAS OF SOIL SUCH AS, A CUT OR FILL, THAT WILL REMAIN EXPOSED.
2. SEEDBED PREPARATION MAY INCLUDE THE FOLLOWING:
   A. IF INFERTILE OR COARSE TEXTURED SUBSOIL WILL BE EXPOSED DURING GRADING, STOCKPILE TOPSOIL AND RESPREAD IT OVER THE FINISHED SLOPE AND ROLL IT TO PROVIDE A FIRM SEEDBED.
   B. IF CONSTRUCTION FILLS HAVE LEFT SOIL EXPOSED WITH A LOOSE, ROUGH, OR IRREGULAR SURFACE, TRACK WALK UP SLOPE.
   C. IF CUTS OR CONSTRUCTION EQUIPMENT HAVE LEFT A TIGHTLY COMPACTED SURFACE, BREAK WITH CHISEL PLOW OR OTHER SUITABLE IMPLEMENT.

   PERFORM ALL CULTURAL OPERATIONS ACROSS OR AT RIGHT ANGLES TO THE SLOPES (CONTOURED). THE SEEDBED SHOULD BE FIRM WITH A FAIRLY FINE SURFACE AFTER ROUGHENING.
3. APPLY THE FOLLOWING MIXTURE TO THE PREPARED SEEDBED AT A RATE OF 60 LBS/ACRE. COVER THE SEED WITH TOPSOIL OR MULCH NO DEEPER THAT 1/2".

MIXTURE:	PERCENT	TYPE
	25%	Hard Fescue (Festuca Longifolia)
	25%	Sheep Fescue, Covar (Festuca Ovina)
	10%	Canada Bluegrass (Poa Compressa)
	20%	Blue Bunch Wheatgrass, Goldar (Agropyron Spicatum)
	20%	Annual Ryegrass (Lolium Multiflorum)

   Fertilizer shall meet WSDOT 9-14.3 and shall be a mix of 10-20-10 (N-P-K). The grass seed mix shall be applied at a rate of 60 lbs/acre in accordance with WSDOT 8-01.3(4). The seeded area shall be kept moist until all seed types have germinated. Ryegrass shall be mowed to allow other grasses to germinate.
4. "HYDROSEEDING" APPLICATIONS WITH APPROVED SEED-MULCH-FERTILIZER MIXTURES MAY ALSO BE USED.
5. SEEDING SHOULD BE DONE IMMEDIATELY AFTER FINAL SHAPING. IF COMPLETED DURING THE PERIODS OF SEPTEMBER 1 THROUGH DECEMBER 31, SITES WHICH CANNOT BE SEEDED DURING THIS TIME PERIOD SHOULD BE PROTECTED UNTIL THE NEXT SEEDING PERIOD WITH MULCH AND/OR IRRIGATION UNTIL GRASSES BECOME ESTABLISHED.

SPOKANE COUNTY ENGINEERS OFFICE
OFFICIAL PUBLIC DOCUMENT ORIGINAL
CONSTRUCTION PLANS
PROJECT #: P-1862
DATE ACCEPTED: 6-25-02
ACCEPTANCE EXPIRES: 6-25-04
ALL PROJECT LANE MILES PUBLIC:
PROJECT LANE MILES PRIVATE:
CONSTRUCTION DOCUMENTATION AND CERTIFIED RECORD DRAWINGS AS-BUILTS ARE REQUIRED PRIOR TO COUNTY ACCEPTANCE AND ASSUMPTION OF THE ROADS AND DRAINAGE FACILITIES FOR MAINTENANCE.
PERMIT REQUIRED! (509) 477-3600
NOTIFY PERMIT SUPERVISOR 48 BUSINESS DAYS PRIOR TO CONSTRUCTION.

DEVELOPER'S APPROVAL

By: _____ Date: 5-25-2000

CALL BEFORE YOU DIG: 509-456-8000

P-1862 Eng. Road. Drainage

GRADING, DRAINAGE AND EROSION CONTROL PLAN

WANDERVIEW ESTATES

14103 N. LITTLE SPOKANE DRIVE

SPOKANE COUNTY, WASHINGTON

DAVID EVANS AND ASSOCIATES, INC.
WEST 110 CATALDO
SPOKANE, WA. 99201 (509) 327-8697

JAMES P. OLSON STATE OF WASHINGTON REGISTERED PROFESSIONAL ENGINEER
EXPIRES: JAN. 6, 2001

REVISIONS	APP'D.

DRAWING NO. C3.1
SCALE: AS NOTED
DESIGN: WLO - CSL
DATE: MARCH, 2000
DRAWN: DCJ - WES
PROJECT: JTS00002
CHECKED: WLO
FILE NAME: SHEET4
REVISION NUMBER:

JTS00002 DCJ 05/24/00 14:37:04 DCJ P:\JTS00001\AUTOCAD\SHEET4.dwg

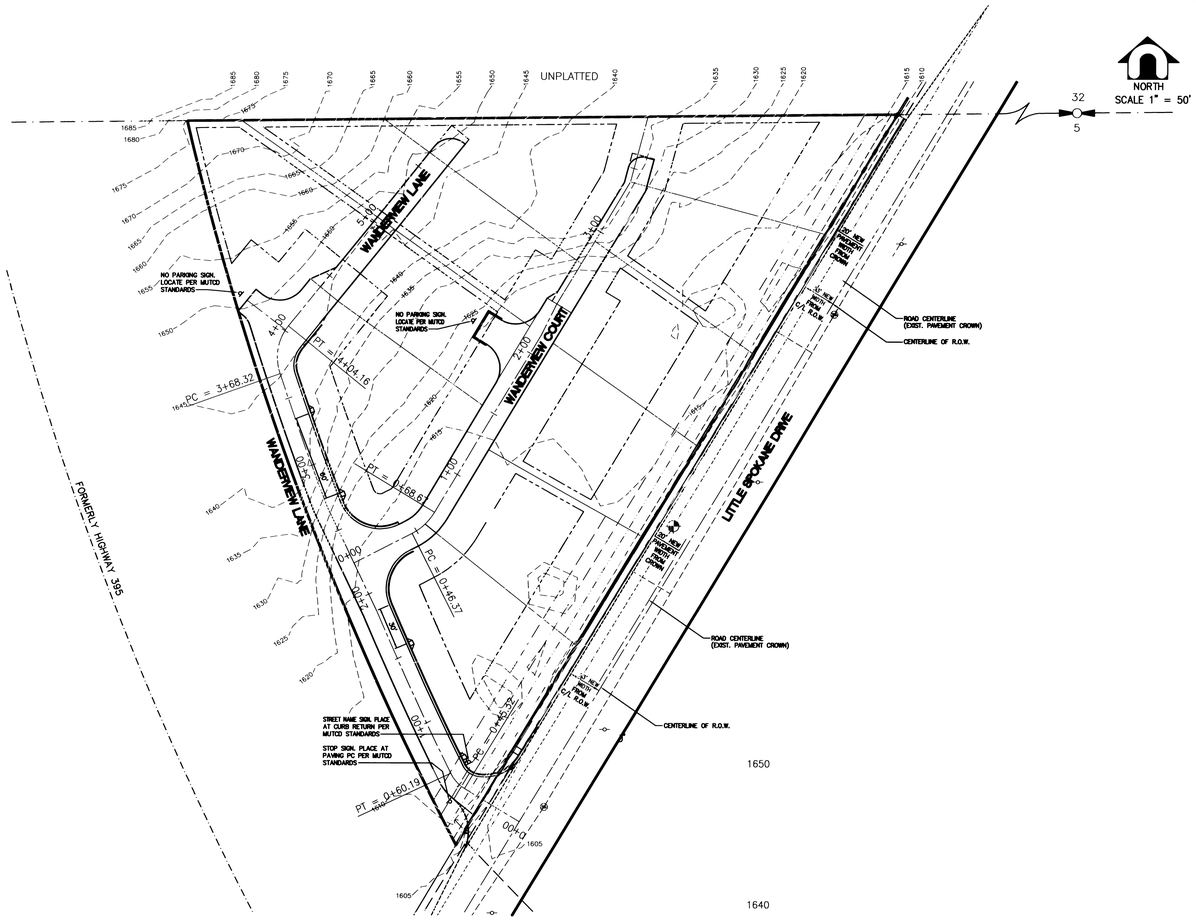

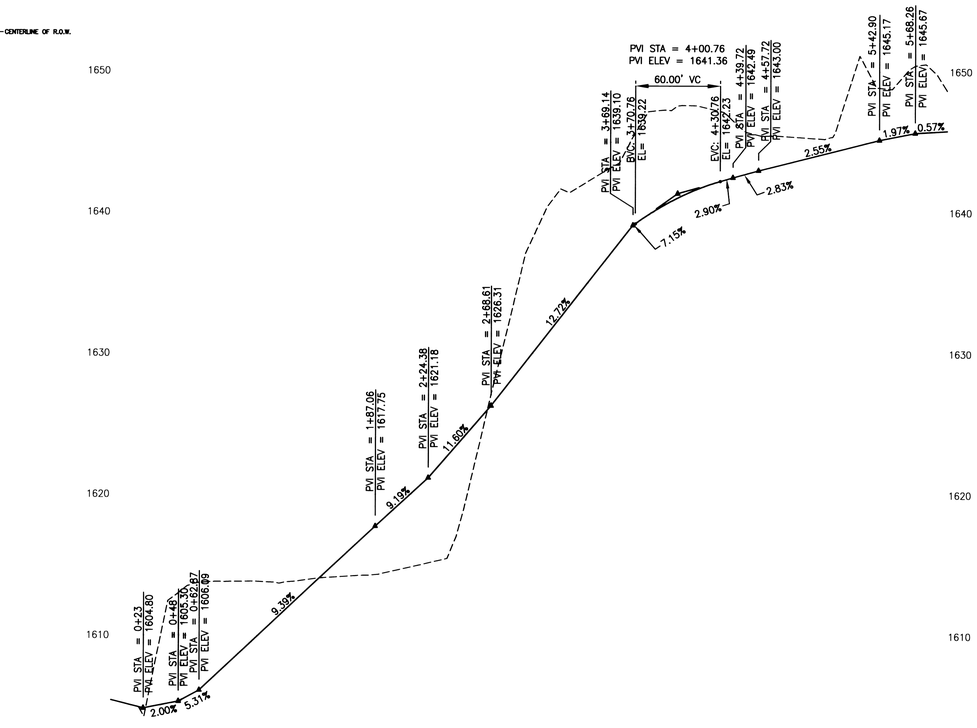

DATUM ELEV
1590.00

1605.4	1605.38	1613.1	1605.41	1613.8	1609.58	1614.1	1614.27	1614.6	1618.94	1619.2	1624.15	1638.7	1630.30	1643.0	1636.66	1647.5	1641.00	1645.7	1642.78	1645.3	1644.08	1648.8	1645.31

0+00 1+00 2+00 3+00 4+00 5+00

WANDERVIEW LANE PROFILE
HORIZONTAL SCALE: 1" = 50'
VERTICAL SCALE: 1" = 5'

SPOKANE COUNTY ENGINEERS OFFICE
OFFICIAL PUBLIC DOCUMENT ORIGINAL
CONSTRUCTION PLANS
PRIVATE ROADS
PROJECT #: P-1862
DATE ACCEPTED: 06-05-00
ACCEPTANCE EXPIRES: 06-05-02
PROJECT LANE MILES: .30
CONSTRUCTION DOCUMENTATION AND CERTIFIED RECORD DRAWINGS, "AS-BUILTS" ARE REQUIRED PRIOR TO RELEASE OF INSPECTION BOND.
APPROACH PERMIT REQUIRED! (509) 477-3600 PRIOR TO CONSTRUCTION.

DEVELOPER'S APPROVAL
By: _____ Date: 5-25-2000

CALL BEFORE YOU DIG: 509-456-8000

WANDERVIEW LANE PLAN/PROFILE
WANDERVIEW ESTATES
14103 N. LITTLE SPOKANE DRIVE
SPOKANE COUNTY, WASHINGTON

WALTER L. LAWRENCE, JR. STATE OF WASHINGTON 19331 REGISTERED PROFESSIONAL ENGINEER
EXPIRES: JAN. 6, 2001

REVISIONS	APPD.

DRAWING NO. C4.1
SCALE: AS NOTED
DESIGN: WLO - CSL
DATE: MARCH, 2000
DRAWN: DCJ - WES
PROJECT: JTSD0002
CHECKED: WLO
FILE NAME: C41
REVISION NUMBER:

JTSD0002 DCJ 05/24/00 14:59:37 DCJ P:\JTS10001\AUTOCAD\C41.dwg

P-1862 Eng. Road · Drainage

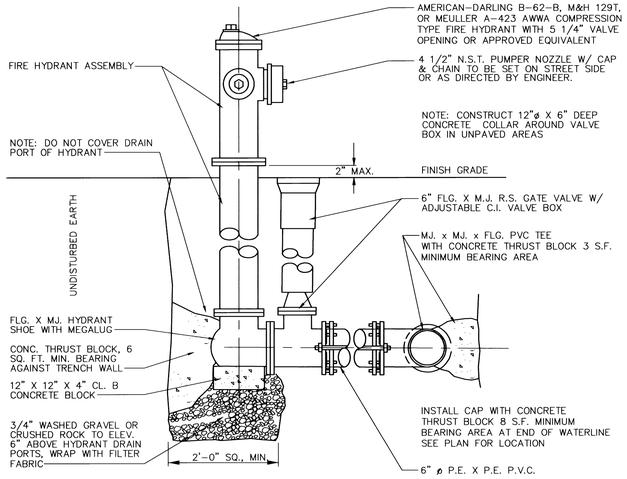

1 TYPICAL FIRE HYDRANT DETAIL

NOT TO SCALE

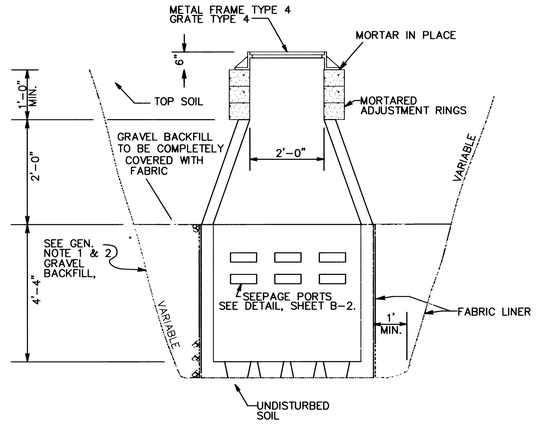

GENERAL NOTES

1. GRAVEL BACKFILL QUANTITY FOR DRYWELLS : TYPE "A" – 30 CUBIC YARDS MINIMUM / 42 TONS.
2. SPECIAL BACKFILL MATERIAL FOR DRYWELLS SHALL CONSIST OF WASHED GRAVEL GRADED FROM 1" TO 3" WITH A MAXIMUM OF 5% PASSING THE U.S. No. 200 SCREEN, AS MEASURED BY WEIGHT. A MAXIMUM OF 10% OF THE AGGREGATE, AS MEASURED BY WEIGHT, MAY BE CRUSHED OR FRACTURED ROCK. THE REMAINING 90% SHALL BE NATURALLY OCCURRING UNFRACTURED MATERIAL.
3. FABRIC SHALL BE MODERATE SURVIVABILITY AS OUTLINED IN STANDARD SPECIFICATIONS 9-33
4. SEE STANDARD PLANS SHEETS B-2 AND B-3 FOR PRECAST CONCRETE DETAILS.
5. ADJUSTMENT BLOCKS SHALL BE CEMENT CONCRETE.
6. PRECAST RISER MAY BE USED IN COMBINATION WITH, OR IN LIEU OF, ADJUSTING BLOCKS.

2 TYPE "A" DRYWELL DETAIL

NOT TO SCALE

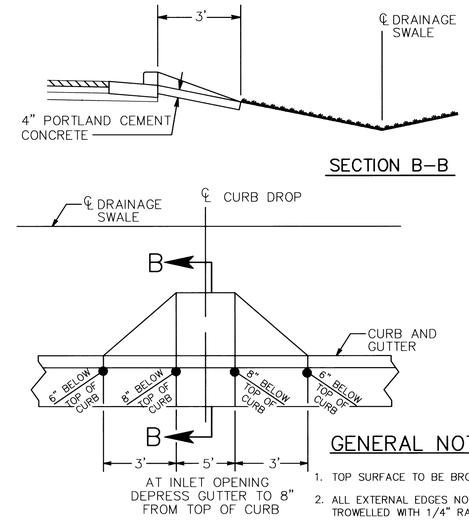

GENERAL NOTES

1. TOP SURFACE TO BE BROOM FINISHED.
2. ALL EXTERNAL EDGES NOT LABELED SHALL BE TROWELLED WITH 1/4" RADIUS EDGER.

3 TYPE 1 CURB INLET DETAIL

NOT TO SCALE

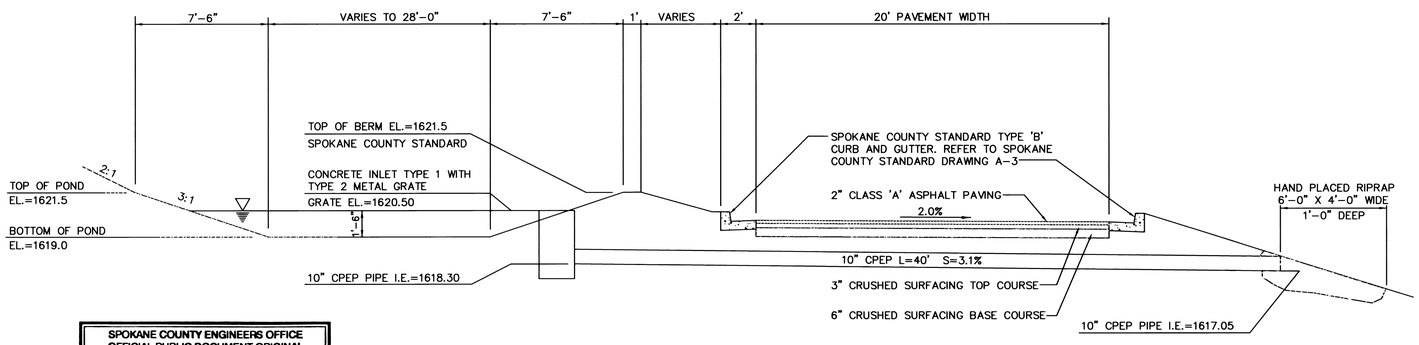

POND 'A' SECTION A-A AND INLET

NOT TO SCALE

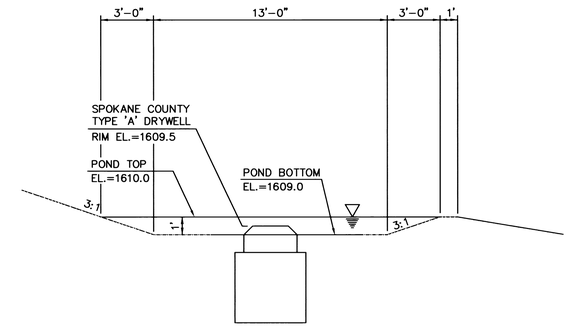

POND 'B' SECTION D-D

NOT TO SCALE

SPOKANE COUNTY ENGINEERS OFFICE
OFFICIAL PUBLIC DOCUMENT ORIGINAL
CONSTRUCTION PLANS
PRIVATE ROADS
PROJECT #: P-1862
DATE ACCEPTED: 06-05-00
ACCEPTANCE EXPIRES: 06-05-02
PROJECT LANE MILES: .325 Total
CONSTRUCTION DOCUMENTATION AND CERTIFIED RECORD DRAWINGS, "AS BUILTS" ARE REQUIRED PRIOR TO RELEASE OF INSPECTION BOND.
APPROACH PERMIT REQUIRED! (509) 477-3600
PRIOR TO CONSTRUCTION

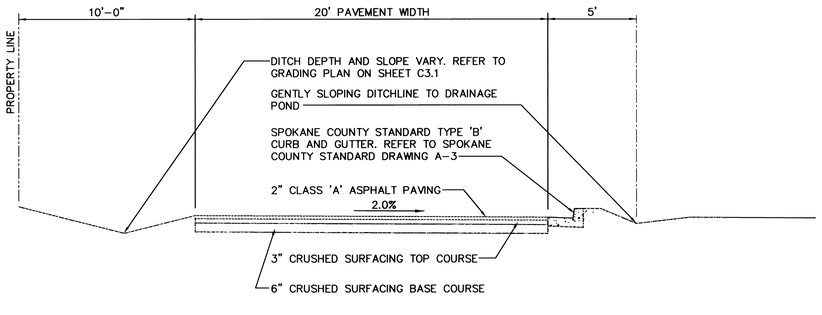

TYPICAL ROAD SECTION B-B WANDERVIEW LANE

(WANDERVIEW COURT SIMILAR–NO TYPE 'B' CURB AND GUTTER)

NOT TO SCALE

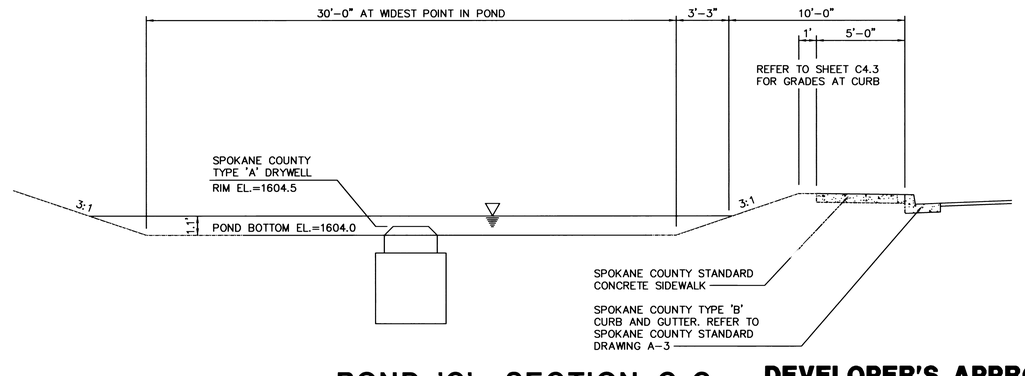

POND 'C' SECTION C-C

NOT TO SCALE

SPOKANE COUNTY ENGINEERS OFFICE
OFFICIAL PUBLIC DOCUMENT ORIGINAL
CONSTRUCTION PLANS
PROJECT #: P-1862
DATE ACCEPTED: 06-05-00
ACCEPTANCE EXPIRES: 06-05-02
PROJECT LANE MILES PUBLIC: 0
PROJECT LANE MILES PRIVATE:
CONSTRUCTION DOCUMENTATION AND CERTIFIED RECORD DRAWINGS, "AS BUILTS" ARE REQUIRED PRIOR TO COUNTY ACCEPTANCE AND ESTABLISHMENT OF THE ROADS AND DRAINAGE FACILITIES FOR MAINTENANCE.
PERMIT REQUIRED! (509) 477-3600
NOTIFY PERMIT ENGINEER 2 BUSINESS DAYS PRIOR TO CONSTRUCTION

DEVELOPER'S APPROVAL

By: _____ Date: 8-25-2000

CALL BEFORE YOU DIG: 509-456-8000

P-1862 Eng. Road & Drainage

DETAILS

WANDERVIEW ESTATES

14103 N. LITTLE SPOKANE DRIVE

SPOKANE COUNTY, WASHINGTON

DAVID EVANS AND ASSOCIATES, INC.
WEST 110 CATALDO
SPOKANE, WA. 99201 (509) 327-8697

				APPD.
				REVISIONS

DRAWING NO. C8.1
SCALE: AS NOTED
DATE: 3.13.00
PROJECT: JTS00002
FILE NAME: SHEET8
DESIGN: WLO – CSL
DRAWN: DCJ – WES
CHECKED: WLO
REVISION NUMBER:

JTS00002 DCJ 05/24/00 15:21:40 DCJ P:\JTS00001\AUTOCAD\SHEET8.dwg