JARVIS SHORT PLAT RECORD DRAWING

NE 1/4 SEC. 30, T. 25 N., R. 45 E.

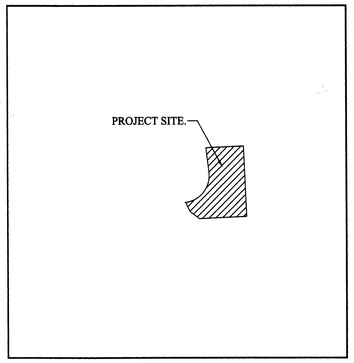

VICINITY MAP

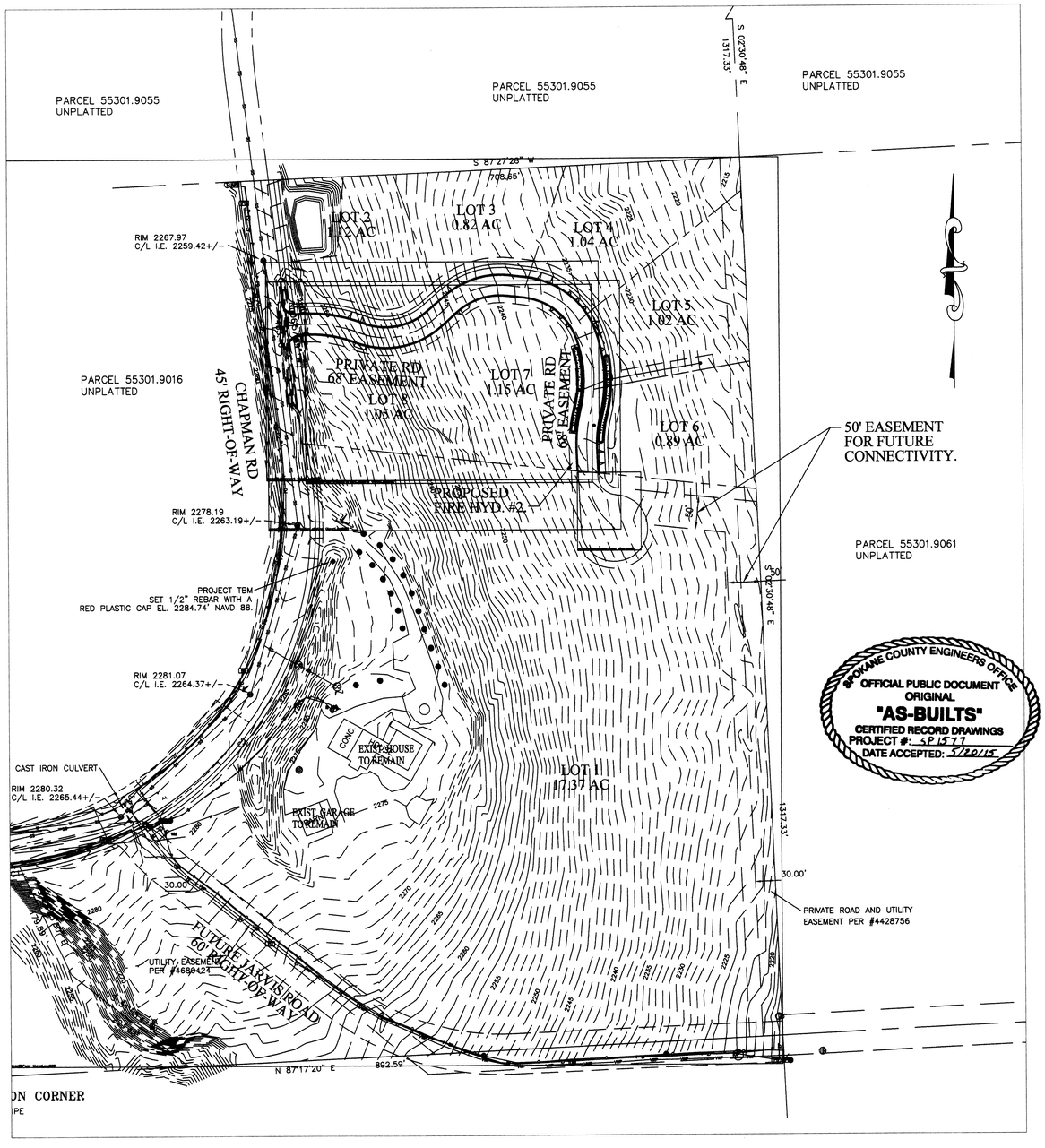

GRAPHIC SCALE

100 0 50 100 200

(IN FEET)
1 inch = 100 ft.

LEGEND

ROADWAY CENTERLINE	
PLAT BOUNDARY	
EASEMENT LINE	
EXISTING CURB	
PROPOSED CURB	
EXISTING SEWER MAIN	8" PVC
PROPOSED SEWER MAIN	8" PVC
EXISTING WATER MAIN	8" D.I.W.M.
PROPOSED WATER MAIN	8" D.I.W.M.
PROPOSED SEWER SERVICE	4" PVC
PROPOSED WATER SERVICE	W 1" TYPE "K"
PROPOSED SAN. SEWER MANHOLE	
PROPOSED FIRE HYDRANT	
EXISTING FIRE HYDRANT	
EXISTING DRYWELL	
PROPOSED DRYWELL	
PROPOSED CATCH BASIN	
PROPOSED CURB DROP INLET	
PROPOSED STORM DRAIN	30 8" PVC
EXISTING CONTOUR	2340
EXISTING INDEX CONTOUR	2350
PROPOSED CONTOUR	2340
PROPOSED INDEX CONTOUR	2350

ABBREVIATIONS

ACT. L	ACTUAL LENGTH
BW	BACK OF SIDEWALK
D.I.W.M.	DUCTILE IRON WATER MAIN
EXIST	EXISTING
FFE	FINISH FLOOR ELEVATION
FG	FINISH GRADE
G	GRADE
HYD	FIRE HYDRANT
I.E.	INVERT ELEVATION
LT	LEFT
MH	MANHOLE
PC	POINT OF CURVE
PE	POLYETHYLENE
PRC	POINT OF REVERSE CURVE
PT	POINT OF TANGENT
PVC	POLYVINYLCHLORIDE
RT	RIGHT
SAN	SANITARY SEWER
SD	STORM DRAIN
SI	STREET INTERSECTION
SG	SUBGRADE
STA. L	STATION LENGTH
SW	SIDEWALK
T.O.C.	TOP OF CURB/CONCRETE
TP	TOP OF PAVEMENT

PROJECT INFORMATION

PROPERTY – SECTION 30, TOWNSHIP 25, RANGE 45 E.W.M.
PARCEL 55301.9088

THE PROPOSED 8 LOTS WILL BE USED FOR SINGLE FAMILY DWELLINGS AND WILL BE SERVED BY PUBLIC SEWER AND WATER. EACH LOT WILL HAVE A PRIVATE PUMP STATION TO CONVEY SEWER DISCHARGE TO AN EXISTING SEWER MAIN IN CHAPMAN ROAD.

OWNER
JOSEPH JARVIS
17917 E. CHAPMAN ROAD
GREENACRES, WA. 99016
(509) 370-0637

ENGINEER
JAY R. BONNETT ENGINEERING
803 E. 3RD AVE.
SPOKANE, WA 99202
(509) 534-4014
ATTN: MICHAEL HAWKINS

UNDERGROUND SERVICE ALERT
ONE-CALL NUMBER
811
CALL TWO BUSINESS DAYS BEFORE YOU DIG

GENERAL NOTES

1. ALL METHODS AND MATERIALS SHALL COMPLY WITH THE LATEST EDITIONS OF THE INTERNATIONAL BUILDING CODE; THE WASHINGTON STATE DEPART. OF TRANSPORTATION'S STANDARD SPECIFICATIONS FOR ROAD, BRIDGE AND MUNICIPAL CONSTRUCTION; THE SPOKANE COUNTY STANDARDS FOR ROAD AND SEWER CONSTRUCTION; AWWA; APWA; AND ALL OTHER APPLICABLE LOCAL, STATE AND FEDERAL CODES, RULES, AND REGULATIONS.
2. THE CONTRACTOR SHALL HAVE A RESPONSIBLE PARTY WHO SHALL HAVE THE AUTHORITY TO REPRESENT AND ACT FOR THE CONTRACTOR AT THE JOB SITE DURING ALL WORKING HOURS
3. CONTRACTOR SHALL BE RESPONSIBLE TO PROVIDE ALL MATERIALS REQUIRED FOR CONSTRUCTION OF THE IMPROVEMENTS SHOWN IN THIS PLAN SET
4. CONTRACTOR SHALL BE RESPONSIBLE FOR PROVIDING TWO (2) DAYS NOTICE TO SPOKANE COUNTY DIVISION OF UTILITIES AND/OR VERA WATER AND POWER PRIOR TO BEGINNING SEWER OR WATER CONSTRUCTION ACTIVITY.
5. CONTRACTOR SHALL VERIFY ALL CONDITIONS AND DIMENSIONS AT THE PROJECT SITE BEFORE STARTING WORK AND SHALL NOTIFY THE ENGINEER OF ANY DISCREPANCIES.
6. UNLESS OTHERWISE INDICATED, ALL DISTURBED AREAS SHALL BE RETURNED TO THE EQUIVALENT OF THEIR PRECONSTRUCTION CONDITION.
7. ALL APPROVED DEVIATIONS FROM THESE PLANS SHALL BE RECORDED ON A SET OF "AS-BUILT" DRAWINGS WHICH SHALL BE SUBMITTED TO THE ENGINEER OF RECORD PRIOR TO PROJECT COMPLETION AND ACCEPTANCE. DEVELOPER/OWNER SHALL BE RESPONSIBLE FOR PROVIDING CONSTRUCTION CERTIFICATION DOCUMENTATION FOR SUBGRADE, BASE, PAVEMENT, AND CONCRETE TESTING.
8. SLOPE OF FINISHED GRADE SHALL BE CONSTANT BETWEEN FINISHED CONTOURS OR SPOT ELEVATIONS SHOWN.
9. CONTRACTOR SHALL BE RESPONSIBLE FOR INSTALLATION, MAINTENANCE, AND REMOVAL OF SHORING AND BRACING NECESSARY TO PROTECT WORKERS, EXISTING BUILDINGS, STREETS, WALKWAYS, UTILITIES AND OTHER IMPROVEMENTS AND EXCAVATIONS AGAINST LOSS OF GROUND OR CAVING EMBANKMENTS.
10. SURVEY INFORMATION AND UNDERGROUND UTILITY LOCATIONS USED IN THE PREPARATION OF THESE DRAWINGS WERE FURNISHED BY OTHERS. J.R. BONNETT ENGINEERING ASSUMES NO RESPONSIBILITY FOR THEIR COMPLETENESS OR ACCURACY.
11. ALL LOCATIONS OF EXISTING UTILITIES SHOWN HEREON HAVE BEEN ESTABLISHED BY FIELD SURVEY OR OBTAINED FROM AVAILABLE RECORDS AND SHOULD THEREFORE BE CONSIDERED APPROXIMATE ONLY AND NOT NECESSARILY COMPLETE. IT IS THE CONTRACTOR'S RESPONSIBILITY TO VERIFY THE LOCATION, DEPTH, SIZE, TYPE AND CONDITION OF UTILITIES SHOWN ON THESE DRAWINGS AND TO HAVE AN APPROVED LOCATING SERVICE (1-800-456-8000) LOCATE AND IDENTIFY UTILITIES WITHIN THE CONSTRUCTION AREA.
12. THE CONTRACTOR SHALL PROVIDE AND MAINTAIN TEMPORARY EROSION AND SEDIMENTATION CONTROL FACILITIES AS REQUIRED TO PREVENT EROSION AND TO ENSURE THAT SEDIMENT-LADEN WATER DOES NOT LEAVE THE CONSTRUCTION SITE.
13. EXISTING UTILITIES DAMAGED DURING CONSTRUCTION SHALL BE REPAIRED AT THE CONTRACTOR'S EXPENSE AND SHALL BE INSPECTED BY THE ENGINEER OF RECORD.
14. PIPE LENGTHS SHOWN ON PLANS ARE APPROXIMATE AND MAY CHANGE DUE TO FIELD CONDITIONS.
15. CONTRACTOR SHALL OBTAIN AND PAY FOR ALL PERMITS REQUIRED FOR CONSTRUCTION IDENTIFIED ON THESE PLANS.
16. ALL DISTURBED SOIL AREAS SHALL BE SEEDED OR STABILIZED BY OTHER APPROVED METHODS FOR PREVENTION OF ON-SITE EROSION AFTER THE COMPLETION OF CONSTRUCTION.
17. CONTRACTOR SHALL HAVE A PERMIT AND AN APPROVED SET OF PLANS ON-SITE AT ALL TIMES DURING CONSTRUCTION.
18. ALL SUBGRADE PREPARATION, COMPACTION, ROAD BASE, ASPHALT CONCRETE PAVEMENT AND CONCRETE TESTING SHALL BE IN ACCORDANCE WITH SPOKANE COUNTY STANDARDS FOR ROAD AND SEWER CONSTRUCTION.
19. ALL PONDS/ SWALES SHOWN ON THE PLANS SHALL BE INSTALLED INCLUDING THE ROUGH GRADING AND DRYWELL INSTALLATION CONCURRENT WITH THE ROAD CONSTRUCTION. FOLLOWING THE PAVING, THE ROADSIDE SWALES SHALL BE HYDROSEEDED OR SODDED WITH TURF GRASS AND PROVIDED WITH AN IRRIGATION SYSTEM. THE PONDS WITHIN THE NATURAL DRAINAGE CHANNEL SHALL BE HYDROSEEDED WITH 'DRYLAND GRASS'. THE DEVELOPER SHALL BE RESPONSIBLE FOR IRRIGATION AND MAINTENANCE OF ROADSIDE SWALES.
20. A PRE-CONSTRUCTION CONFERENCE WITH SPOKANE COUNTY, PROJECT ENGINEER, AND CONTRACTOR IS RECOMMENDED PRIOR TO COMMENCING WORK.
21. ONSITE GRADING SHALL BE IN ACCORDANCE WITH THE APPROVED GRADING PLAN AND ESC PLAN. ANY IMPORT OR EXPORT OF MATERIAL SHALL BE FROM A PREAPPROVED SOURCE/DESTINATION AND COORDINATED WITH THE SPOKANE COUNTY DEPARTMENT OF BUILDING AND PLANNING AT 477-3675. GRADING ON THIS SITE OR ANY OTHER SITE MUST COMPLY WITH ALL DEVELOPMENT REGULATIONS INCLUDING, BUT NOT LIMITED TO, GRADING PERMITS, SEPA REVIEW, TIMBER HARVEST PERMITS, CRITICAL AREAS, FLOODPLAINS, DESIGNATED DRAINAGEWAYS, ETC.

SPOKANE COUNTY ENGINEERS OFFICE
OFFICIAL PUBLIC DOCUMENT
ORIGINAL
"AS-BUILTS"
CERTIFIED RECORD DRAWINGS
PROJECT #: SP1577
DATE ACCEPTED: 5/20/15

TABLE OF CONTENTS

COVER SHEET	C0.0
ROAD	
ROAD PLAN	C1.1
ROAD PROFILE	C1.2
SWM PLAN & DETAILS	C1.3

ALLWEST
Testing & Engineering
3005 N. Industrial Lane, 5th Street
Spokane Valley, WA 99216

I HAVE REVIEWED THE CONSTRUCTION AND TO MY KNOWLEDGE FIND IT TO BE IN SUBSTANTIAL CONFORMANCE WITH THE APPROVED CERTIFIED PLANS AND STANDARD SPECIFICATIONS EXCEPT AS NOTED.

VERTICAL DATUM: NAVD88

FOUND 1/2" IRON PIPE AT THE CENTER QUARTER SECTION CORNER SPOKANE COUNTY ID 857. PUBLISHED ORTHOMETRIC HEIGHT 2280.46 FEET NAVD 88 DATUM.

REV.	DATE	BY	DESCRIPTION
1	3/21/14	MLH	ROADWAY PLAN AND PROFILE DRAWING
2	5/15/15	AJ E.	RECORD DRAWING BY ALLWEST TESTING AND ENGINEERING

J.R. BONNETT ENGINEERING
CIVIL AND STRUCTURAL CONSULTING AND DESIGN
803 E. 3RD AVENUE
SPOKANE, WASHINGTON 99202
(509) 534-3929 / FAX (509) 534-4014

JOB TITLE
JARVIS SHORT PLAT
17917 E. CHAPMAN ROAD SPOKANE, WA

SHEET TITLE
RECORD DRAWING COVER SHEET

ANDY J. ELIASON
STATE OF WASHINGTON
22767
REGISTERED PROFESSIONAL ENGINEER
5/15/15
EXPIRES 05/28/15

DATE MARCH 2014
DRAWN BY MLH
DESIGN BY MLH
JOB NO. 10-129.10
SHEET NO. C0.0

RECORD DRAWING

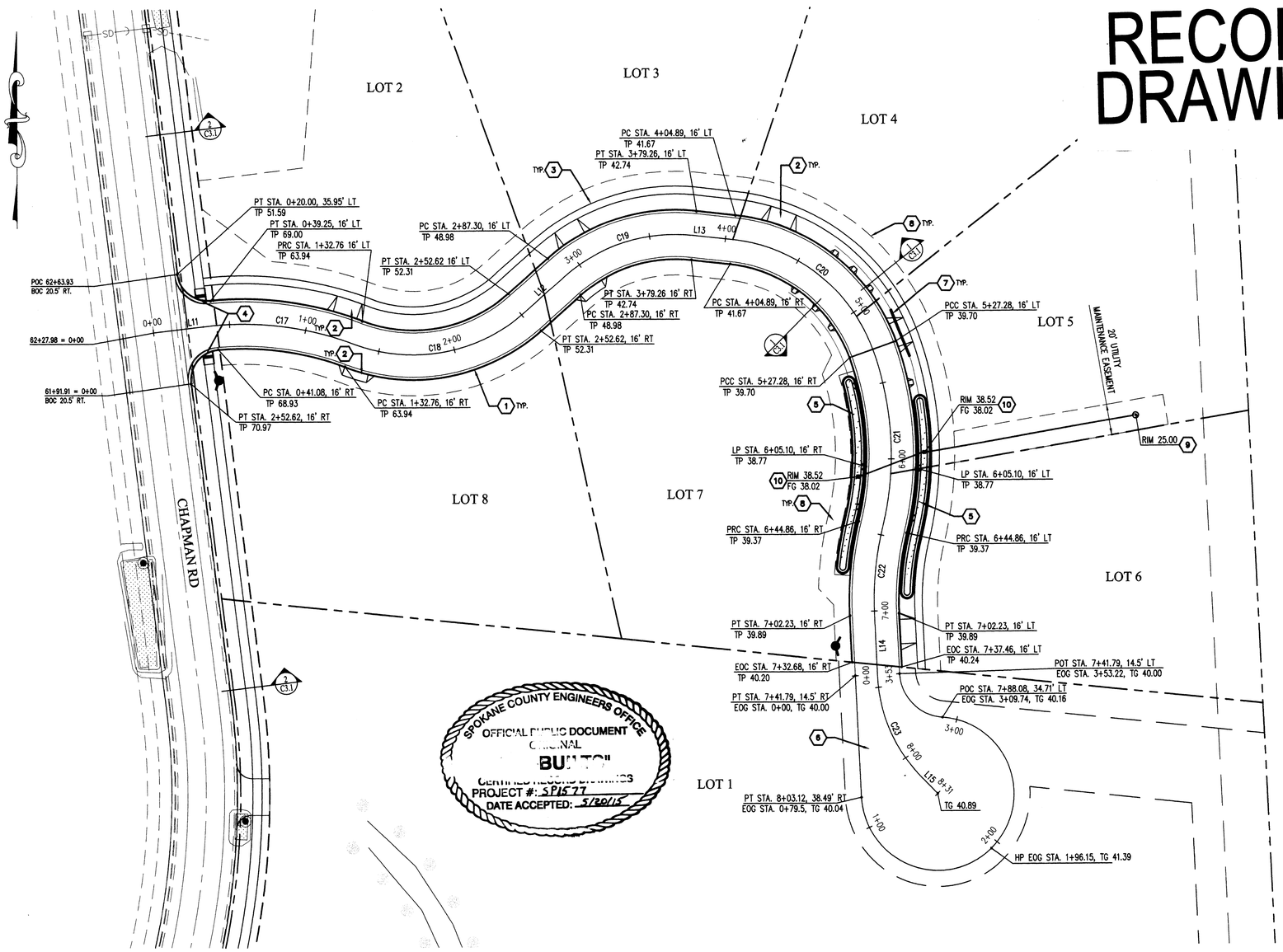

MEMORY LN. GRADING AND HOIZONTAL CONTROL PLAN

1" = 40'

GENERAL NOTES

ALL METHODS AND MATERIALS SHALL COMPLY WITH THE LATEST EDITIONS OF THE INTERNATIONAL BUILDING CODE; THE WASHINGTON STATE DEPARTMENT OF TRANSPORTATION'S STANDARD SPECIFICATIONS FOR ROAD BRIDGE AND MUNICIPAL CONSTRUCTION; SPOKANE COUNTY STANDARDS FOR ROAD & SEWER CONSTRUCTION; AWWA; APWA; AND ALL OTHER APPLICABLE LOCAL, STATE AND FEDERAL CODES, RULES, AND REGULATIONS.

ROAD KEY NOTES

1. TYPE 'B' CONC. CURB & GUTTER PER SPOKANE COUNTY STD. PLAN A-3.
2. 16' WIDE CONC. DRIVEWAY APPROACH PER SPOKANE COUNTY STD. PLAN A-4.
3. 5' WIDE CONC. SIDEWALK PER SPOKANE COUNTY STD. PLAN A-4. TYPICAL ONE SIDE ONLY.
4. 5' WIDE CURB RAMP WITH FIBERGLASS DETECTABLE WARNING PER SPOKANE COUNTY STD. PLAN A-5.
5. GRASSY SWALE WITH TYPE 'B' DRYWELL PER SPOKANE COUNTY STD. DETAIL B-1a AND B-19. GEOTECH TO VERIFY AND DOCUMENT CONSTRUCTION OF SWALE.
6. TEMPORARY GRAVEL TURNAROUND WITH 7" MIN. CRUSHED GRAVEL COMPACTED TO 95% MAX. DRY DENSITY.
7. 33' - 12" CORRUGATED METEL PIPE. INVERT ELEV. OUT = 38.34, INVERT ELEV.IN =38.67
8. LIMIT OF ACCESS AND 10' UTILITY EASEMENT.
9. TYPE 'A' PRECAST DRYWELL PER SPOKANE COUNTY STD DTLS B-1a & B-19. PROVIDE SOLID COVER MARKED "STORM" SET 1" ABOVE GRADE.
10. TYPE 1 CATCH BASIN AND BI-DIRECTIONAL VANED GRATE PER WILBERT PRECAST PRODUCT #1827 AND D&L MODEL #-4432. SEE DETAIL 3/3.1

GENERAL NOTES

1. ALL METHODS AND MATERIALS SHALL COMPLY WITH THE LATEST EDITIONS OF THE UNIFORM BUILDING CODE; THE WASHINGTON STATE DEPARTMENT OF TRANSPORTATION'S STANDARD SPECIFICATIONS FOR ROAD BRIDGE AND MUNICIPAL CONSTRUCTION; SPOKANE COUNTY STANDARDS FOR ROAD AND; SEWER CONSTRUCTION; AWWA; APWA; AND ALL OTHER APPLICABLE LOCAL, STATE AND FEDERAL CODES, RULES, AND REGULATIONS.
2. THE CONTRACTOR SHALL HAVE A RESPONSIBLE PARTY WHO SHALL HAVE THE AUTHORITY TO REPRESENT AND ACT FOR THE CONTRACTOR AT THE JOB SITE DURING ALL WORKING HOURS
3. CONTRACTOR SHALL BE RESPONSIBLE TO PROVIDE ALL MATERIALS REQUIRED FOR CONSTRUCTION OF THE IMPROVEMENTS SHOWN IN THIS PLAN SET
4. CONTRACTOR SHALL BE RESPONSIBLE FOR PROVIDING TWO (2) DAYS NOTICE TO CITY OF SPOKANE VALLEY DIRECTOR OF PUBLIC WORKS PRIOR TO BEGINNING ANY CONSTRUCTION ACTIVITY.
5. CONTRACTOR SHALL VERIFY ALL CONDITIONS AND DIMENSIONS AT THE PROJECT SITE BEFORE STARTING WORK AND SHALL NOTIFY THE ENGINEER OF ANY DISCREPANCIES.
6. UNLESS OTHERWISE INDICATED, ALL DISTURBED AREAS SHALL BE RETURNED TO THE EQUIVALENT OF THEIR PRECONSTRUCTION CONDITION.
7. ALL APPROVED DEVIATIONS FROM THESE PLANS SHALL BE RECORDED ON A SET OF "AS-BUILT" DRAWINGS WHICH SHALL BE SUBMITTED TO THE ENGINEER OF RECORD PRIOR TO PROJECT COMPLETION AND ACCEPTANCE.
8. SLOPE OF FINISHED GRADE SHALL BE CONSTANT BETWEEN FINISHED CONTOURS OR SPOT ELEVATIONS SHOWN.
9. CONTRACTOR SHALL BE RESPONSIBLE FOR INSTALLATION, MAINTENANCE, AND REMOVAL OF SHORING AND BRACING NECESSARY TO PROTECT WORKERS, EXISTING BUILDINGS, STREETS, WALKWAYS, UTILITIES AND OTHER IMPROVEMENTS AND EXCAVATIONS AGAINST LOSS OF GROUND OR CAVING EMBANKMENTS.
10. SURVEY INFORMATION AND UNDERGROUND UTILITY LOCATIONS USED IN THE PREPARATION OF THESE DRAWINGS WERE FURNISHED BY OTHERS. J.R. BONNETT ENGINEERING ASSUMES NO RESPONSIBILITY FOR THEIR COMPLETENESS OR ACCURACY.
11. ALL LOCATIONS OF EXISTING UTILITIES SHOWN HEREON HAVE BEEN ESTABLISHED BY FIELD SURVEY OR OBTAINED FROM AVAILABLE RECORDS AND SHOULD THEREFORE BE CONSIDERED APPROXIMATE ONLY AND NOT NECESSARILY COMPLETE. IT IS THE CONTRACTOR'S RESPONSIBILITY TO VERIFY THE LOCATION, DEPTH, SIZE, TYPE AND CONDITION OF UTILITIES SHOWN ON THESE DRAWINGS AND TO HAVE AN APPROVED LOCATING SERVICE (1-800-456-8000) LOCATE AND IDENTIFY UTILITIES WITHIN THE CONSTRUCTION AREA.
12. THE CONTRACTOR SHALL PROVIDE AND MAINTAIN TEMPORARY EROSION AND SEDIMENTATION CONTROL FACILITIES AS REQUIRED TO PREVENT EROSION AND TO ENSURE THAT SEDIMENT-LADEN WATER DOES NOT LEAVE THE CONSTRUCTION SIGHT.
13. EXISTING UTILITIES DAMAGED DURING CONSTRUCTION SHALL BE REPAIRED AT THE CONTRACTOR'S EXPENSE AND SHALL BE INSPECTED BY THE ENGINEER OF RECORD.
14. PIPE LENGTHS SHOWN ON PLANS ARE APPROXIMATE AND MAY CHANGE DUE TO FIELD CONDITIONS.
15. CONTRACTOR SHALL OBTAIN AND PAY FOR ALL PERMITS REQUIRED FOR CONSTRUCTION IDENTIFIED ON THESE PLANS.
16. ALL DISTURBED SOIL AREAS SHALL BE SEEDED OR STABILIZED BY OTHER APPROVED METHODS FOR PREVENTION OF ON-SITE EROSION AFTER THE COMPLETION OF CONSTRUCTION.
17. CONTRACTOR SHALL HAVE A PERMIT AND AN APPROVED SET OF PLANS ON-SITE AT ALL TIMES DURING CONSTRUCTION.
18. SEE ARCHITECTURAL DRAWINGS FOR ADDITIONAL SITE INFORMATION.
19. COMPACTION SHALL CONFORM TO WSDOT 1994 STANDARD SPECIFICATIONS 2-03. ASPHALT SHALL BE CLASS B AND PLACED IN ACCORDANCE WITH 5-04 WSDOT STANDARD SPECIFICATIONS. GRAVEL BASE SHALL CONFORM TO WSDOT

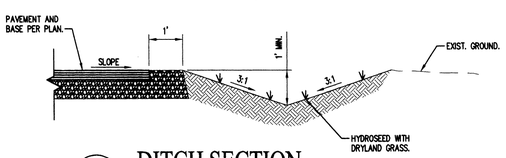

1 / C3.1 DITCH SECTION

N.T.S.

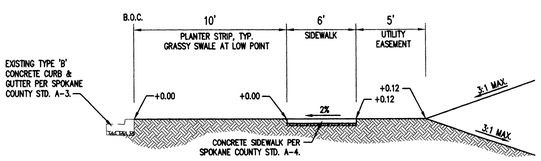

2 / C3.1 CHAPMAN ROAD IMPROVEMENTS

N.T.S.

IMPROVEMENT DIMENSIONS PROVIDED BY APPROVED CHAPMAN ROAD PLANS DESIGNED BY TAYLOR ENGINEERING (SEE SHEETS 2 AND 3 OF 10 FOR ROAD PROFILE)

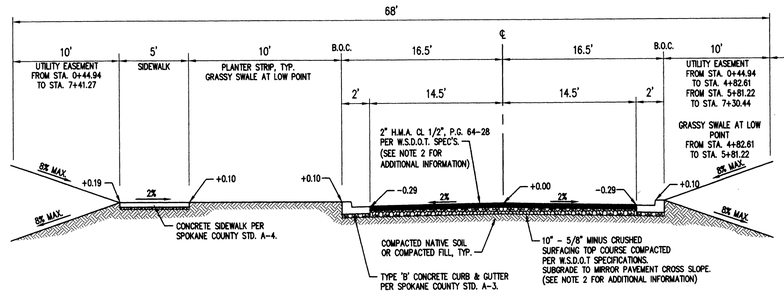

SWALE NOTE:
SWALES SHALL BE HYDROSEEDED WITH DRYLAND GRASS UPON COMPLETION OF STREET IMPROVEMENTS.

NOTE 2:
PER THE GEOTECT REPORT DATED MAY 29, 2014, OPTION 2 FOR THE PAVING SECTION IS 2.5" OF ASPHALT AND 8" OF TOP OR BASE COURSE AGGREGATE.

A MEMORY LN. ROAD SECTION

N.T.S.

DRIVEWAYS AND GRADES BEHIND CURB PER SPOKANE COUNTY STD. DETAIL A-4, EXCEPT AS SHOWN ON GRADING PLAN.

ALLWEST Testing & Engineering

3005 N. Industrial Lane, 5th Street
Spokane Valley, WA 99216

I HAVE REVIEWED THE CONSTRUCTION AND TO MY KNOWLEDGE FIND IT TO BE IN SUBSTANTIAL CONFORMANCE WITH THE APPROVED CERTIFIED PLANS AND STANDARD SPECIFICATIONS EXCEPT AS NOTED.

Line Table: Alignments

Line #	Length	Direction
L11	35.08	N83° 02' 02.07"E
L12	34.68	N48° 35' 09.19"E
L13	25.63	S83° 30' 57.68"E
L14	41.09	S2° 30' 48.46"E
L15	15.14	S44° 17' 01.45"E

Curve Table: Alignments

Curve #	Radius	Length	Chord Direction
C17	200.00	97.68	S82° 58' 26.34"E
C18	110.00	119.86	N79° 48' 07.22"E
C19	110.00	91.96	N72° 32' 05.75"E
C20	110.00	122.40	S51° 38' 21.37"E
C21	200.00	117.58	S2° 55' 15.15"E
C22	200.00	57.37	S5° 42' 13.15"W
C23	100.00	72.90	S23° 23' 55.02"E

GRAPHIC SCALE

40 0 20 40 80

(IN FEET)
1 inch = 40 ft.

VERTICAL DATUM: NAVD88

FOUND 1/2" IRON PIPE AT THE CENTER QUARTER SECTION CORNER SPOKANE COUNTY ID 857. PUBLISHED ORTHOMETRIC HEIGHT 2280.46 FEET NAVD 88 DATUM.

REV.	DATE	BY	DESCRIPTION
1	5/15/15	AJE	RECORD DRAWING by ALLWEST TESTING

J.R. BONNETT ENGINEERING
CIVIL AND STRUCTURAL CONSULTING AND DESIGN
803 E. 3RD AVENUE
SPOKANE, WASHINGTON 99202
(509) 534-3929 / FAX (509) 534-4014

JOB TITLE
JARVIS SHORT PLAT
17917 E. CHAPMAN ROAD SPOKANE, WA

SHEET TITLE
MEMORY LANE ROAD PLAN

ANDY JOEL ELIASON
STATE OF WASHINGTON
42767
REGISTERED PROFESSIONAL ENGINEER
5/19/15

DATE	JUNE 2014
DRAWN BY	MLH
DESIGN BY	MLH
JOB NO.	10-129.10
SHEET NO.	C3.1

RECORD DRAWING

SPOKANE COUNTY ENGINEERS OFFICE
OFFICIAL PUBLIC DOCUMENT
ORIGINAL
"AS-BUILTS"
CERTIFIED RECORD DRAWINGS
PROJECT #: SP1577
DATE ACCEPTED: 5/20/15

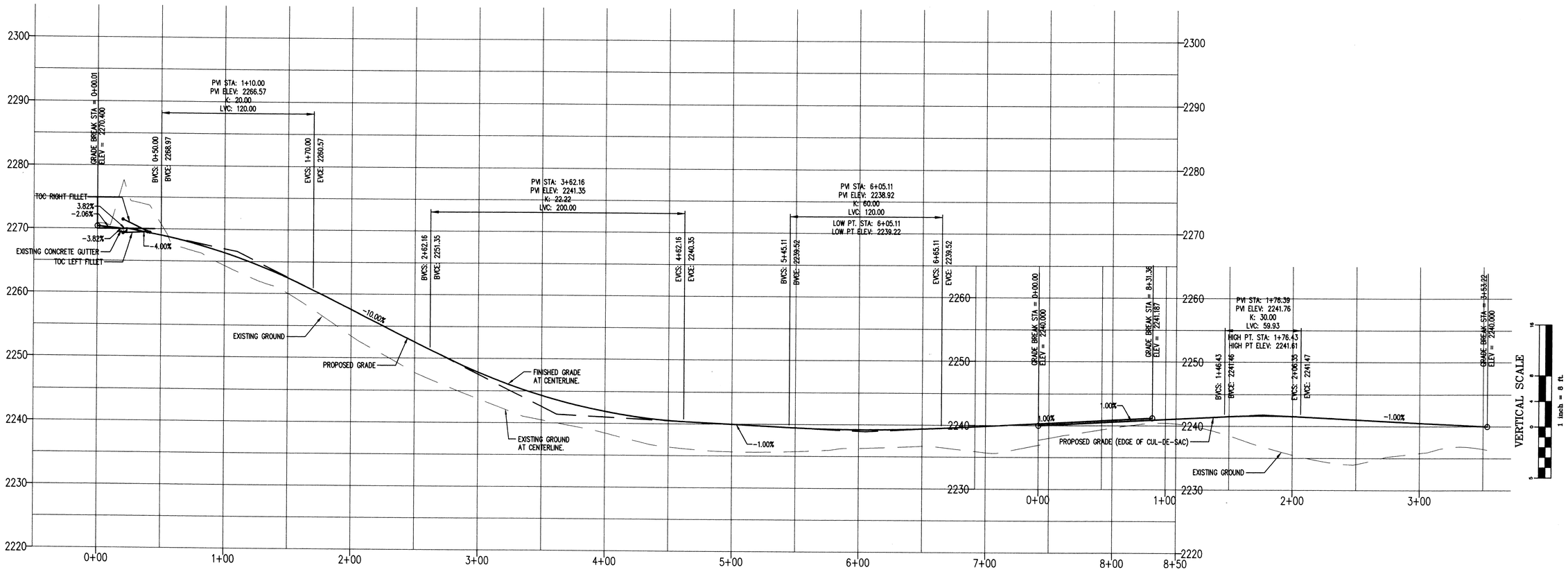

MEMORY LANE PROFILE

HORIZ. SCALE: 1" = 40'
VERT. SCALE: 1" = 8'

HORIZONTAL SCALE
40 0 20 40 80
1 inch = 40 ft.

I HAVE REVIEWED THE CONSTRUCTION AND TO MY KNOWLEDGE FIND IT TO BE IN SUBSTANTIAL CONFORMANCE WITH THE APPROVED CERTIFIED PLANS AND STANDARD SPECIFICATIONS EXCEPT AS NOTED.

ALLWEST Testing & Engineering
3005 N. Industrial Lane, 5th Street
Spokane Valley, WA 99216

VERTICAL DATUM: NAVD88

FOUND 1/2" IRON PIPE AT THE CENTER QUARTER SECTION CORNER SPOKANE COUNTY ID 857. PUBLISHED ORTHOMETRIC HEIGHT 2280.46 FEET NAVD 88 DATUM.

REV.	DATE	BY	DESCRIPTION
1	5/15/15	AJE	RECORD DRAWING by ALLWEST TESTING

J.R. BONNETT ENGINEERING
CIVIL AND STRUCTURAL CONSULTING AND DESIGN
803 E. 3RD AVENUE
SPOKANE, WASHINGTON 99202
(509) 534-3929 / FAX (509) 534-4014

JOB TITLE
JARVIS SHORT PLAT
17917 E. CHAPMAN ROAD SPOKANE, WA

SHEET TITLE
ROAD PROFILE

ANDY JOEL ELIASSON
STATE OF WASHINGTON
42767
REGISTERED PROFESSIONAL ENGINEER
5/19/15

DATE	JUNE 2014
DRAWN BY	MLH
DESIGN BY	MLH
JOB NO.	10-129.10
SHEET NO.	C3.2

RECORD DRAWING

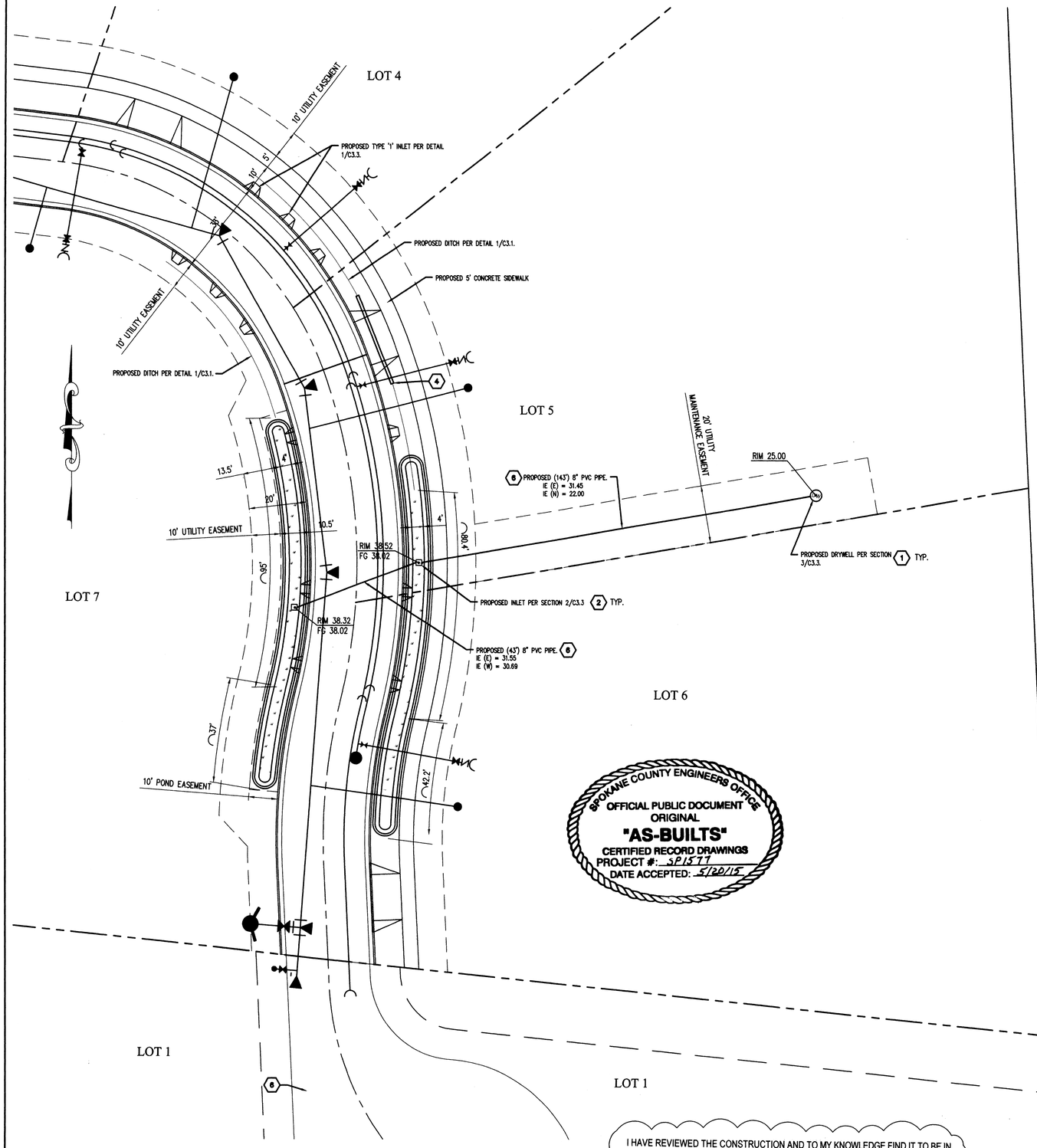

SPOKANE COUNTY ENGINEERS OFFICE
OFFICIAL PUBLIC DOCUMENT
ORIGINAL
"AS-BUILTS"
CERTIFIED RECORD DRAWINGS
PROJECT #: SP1577
DATE ACCEPTED: 5/20/15

MEMORY LN. STORMWATER PONDS

SCALE: 1" = 20'

HORIZONTAL SCALE

20 0 10 20 40

1 inch = 20 ft.

I HAVE REVIEWED THE CONSTRUCTION AND TO MY KNOWLEDGE FIND IT TO BE IN SUBSTANTIAL CONFORMANCE WITH THE APPROVED CERTIFIED PLANS AND STANDARD SPECIFICATIONS EXCEPT AS NOTED.

UNDERGROUND SERVICE ALERT
ONE-CALL NUMBER
811
CALL TWO BUSINESS DAYS BEFORE YOU DIG

ALLWEST Testing & Engineering
3005 N. Industrial Lane, 5th Street
Spokane Valley, WA 99216

GENERAL NOTES

1. CURB INLET SHALL BE CONSTRUCTED IN ACCORDANCE WITH ASTM C 478 (AASHTO M 199) & ASTM C 890 UNLESS OTHERWISE SHOWN ON PLANS OR NOTED IN THE PROJECT SPECIAL PROVISIONS.
2. TOP SURFACE TO BE BROOM FINISHED.
3. ALL EXTERNAL EDGES NOT LABELED SHALL BE TROWELLED WITH 1/4" RADIUS EDGER.
4. DIMENSION "L" SHALL BE SHOWN ON THE PLANS.

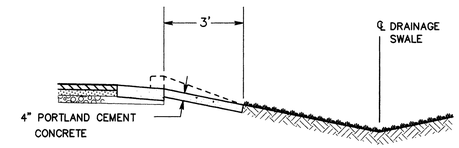

SECTION B–B

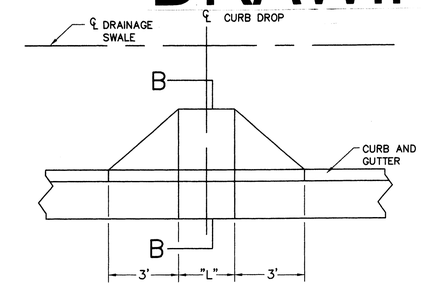

TYPICAL TYPE 1 CURB INLET

1 / C3.3

N.T.S.

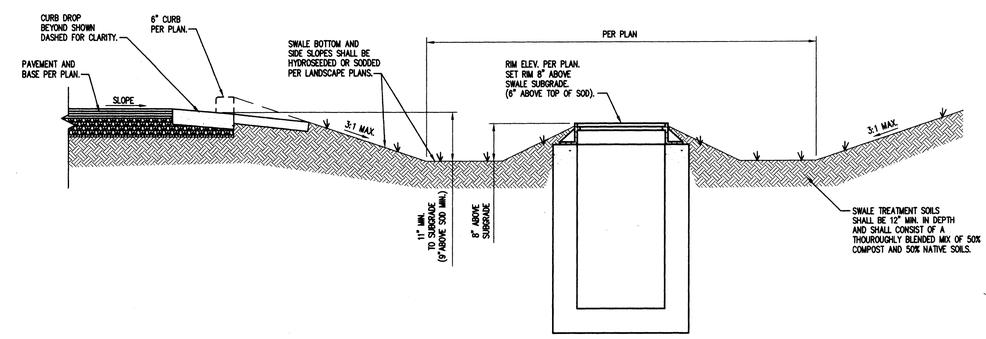

GRASSY SWALE SECTION

2 / C3.3

N.T.S.

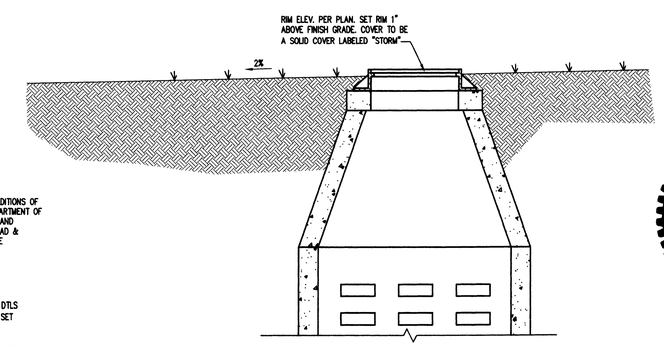

DRYWELL SECTION

3 / C3.3

N.T.S.

GENERAL NOTES

ALL METHODS AND MATERIALS SHALL COMPLY WITH THE LATEST EDITIONS OF THE INTERNATIONAL BUILDING CODE, THE WASHINGTON STATE DEPARTMENT OF TRANSPORTATION'S STANDARD SPECIFICATIONS FOR ROAD BRIDGE AND MUNICIPAL CONSTRUCTION; SPOKANE COUNTY STANDARDS FOR ROAD & SEWER CONSTRUCTION; AWWA; APWA; AND ALL OTHER APPLICABLE LOCAL, STATE AND FEDERAL CODES, RULES, AND REGULATIONS.

ROAD KEY NOTES

1. TYPE 'B' PRECAST DRYWELL PER SPOKANE COUNTY STD DTLS B-1a & B-19. PROVIDE SOLID COVER MARKED "STORM" SET 1" ABOVE GRADE.
2. TYPE 1 CATCH BASIN AND BI-DIRECTIONAL VANED GRATE PER WILBERT PRECAST PRODUCT #1827 AND D&L MODEL #-4432. SEE DETAIL 6/7.2
3. 5' WIDE CONC. SIDEWALK PER SPOKANE COUNTY STD. PLAN A-4. TYPICAL ONE SIDE ONLY.
4. 33' – 12" CORRUGATED METEL PIPE. INVERT ELEV. OUT = 37.77, INVERT ELEV.IN =37.94
5. GRASSY SWALE WITH TYPE 'B' DRYWELL PER SPOKANE COUNTY STD. DETAIL B-1a AND B-19.
6. TEMPORARY GRAVEL TURNAROUND WITH 7" MIN. CRUSHED GRAVEL COMPACTED TO 95% MAX. DRY DENSITY.

VERTICAL DATUM: NAVD88

FOUND 1/2" IRON PIPE AT THE CENTER QUARTER SECTION CORNER SPOKANE COUNTY ID 857. PUBLISHED ORTHOMETRIC HEIGHT 2280.46 FEET NAVD 88 DATUM.

REV.	DATE	BY	DESCRIPTION
1	5/15/15	AJE	RECORD DRAWING by ALLWEST TESTING

J.R. BONNETT ENGINEERING
CIVIL AND STRUCTURAL CONSULTING AND DESIGN
803 E. 3RD AVENUE
SPOKANE, WASHINGTON 99202
(509) 534-3929 / FAX (509) 534-4014

JOB TITLE
JARVIS SHORT PLAT
17917 E. CHAPMAN ROAD
SPOKANE, WA

SHEET TITLE
MEMORY LANE ROAD SIDE POND PLAN

ANDY JOEL ELIASON
STATE OF WASHINGTON
42767
REGISTERED PROFESSIONAL ENGINEER
5/15/15

DATE	JUNE 2014
DRAWN BY	MLH
DESIGN BY	MLH
JOB NO.	10-129.10
SHEET NO.	C3.3