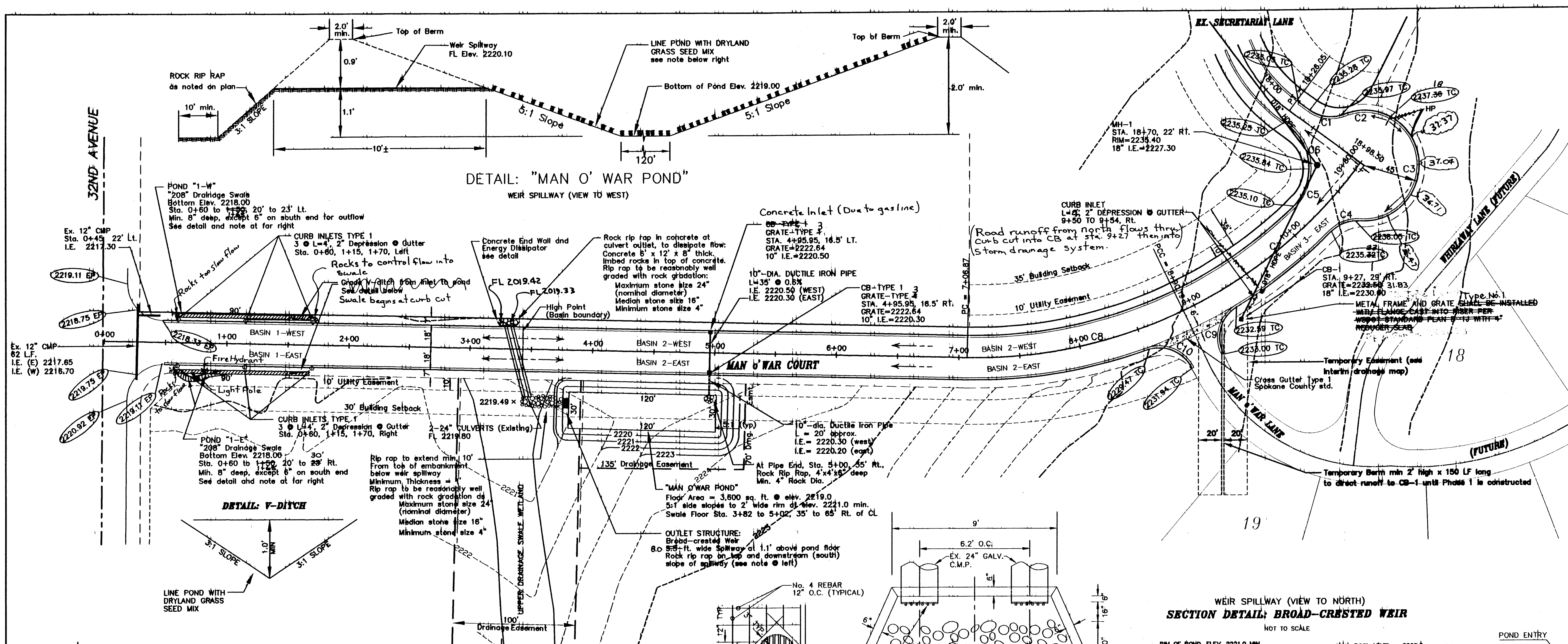

– CURVE DATA – CENTERLINE AND EDGE OF PAVEMENT (THIS SHEET ONLY)			
CURVE	RADIUS	LENGTH	DELTA
C1	30.00'	30.25'	57°46'09"
C2	45.00'	39.10'	49°46'58"
C3	45.00'	122.58'	156°04'11"
C4	30.00'	26.04'	49°43'34"
C5	45.00'	40.34'	51°21'53"
C6	45.00'	40.34'	51°21'53"
C7	390.00'	189.80'	27°53'05"
C8	390.00'	183.32'	26°55'55"
C9	30.00'	45.07'	86°04'21"
C10	30.00'	44.11'	84°14'04"

GRAPHIC SCALE (IN FEET)
0 25 50 100
1" = 50'

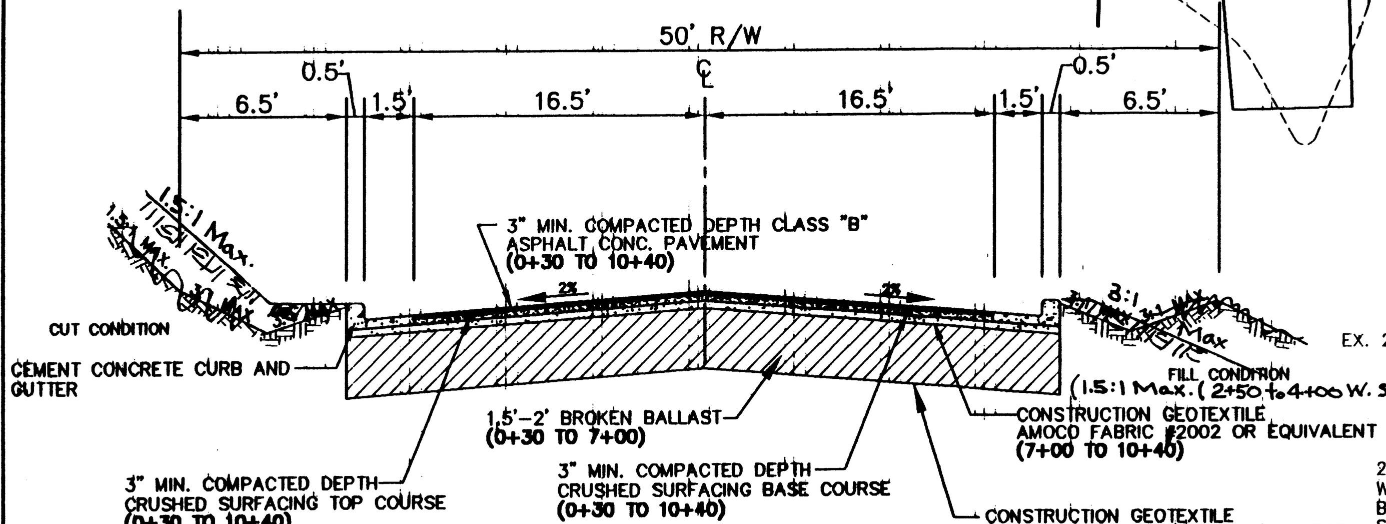

ROAD SECTION FOR MAN O'WAR COURT

NOT TO SCALE

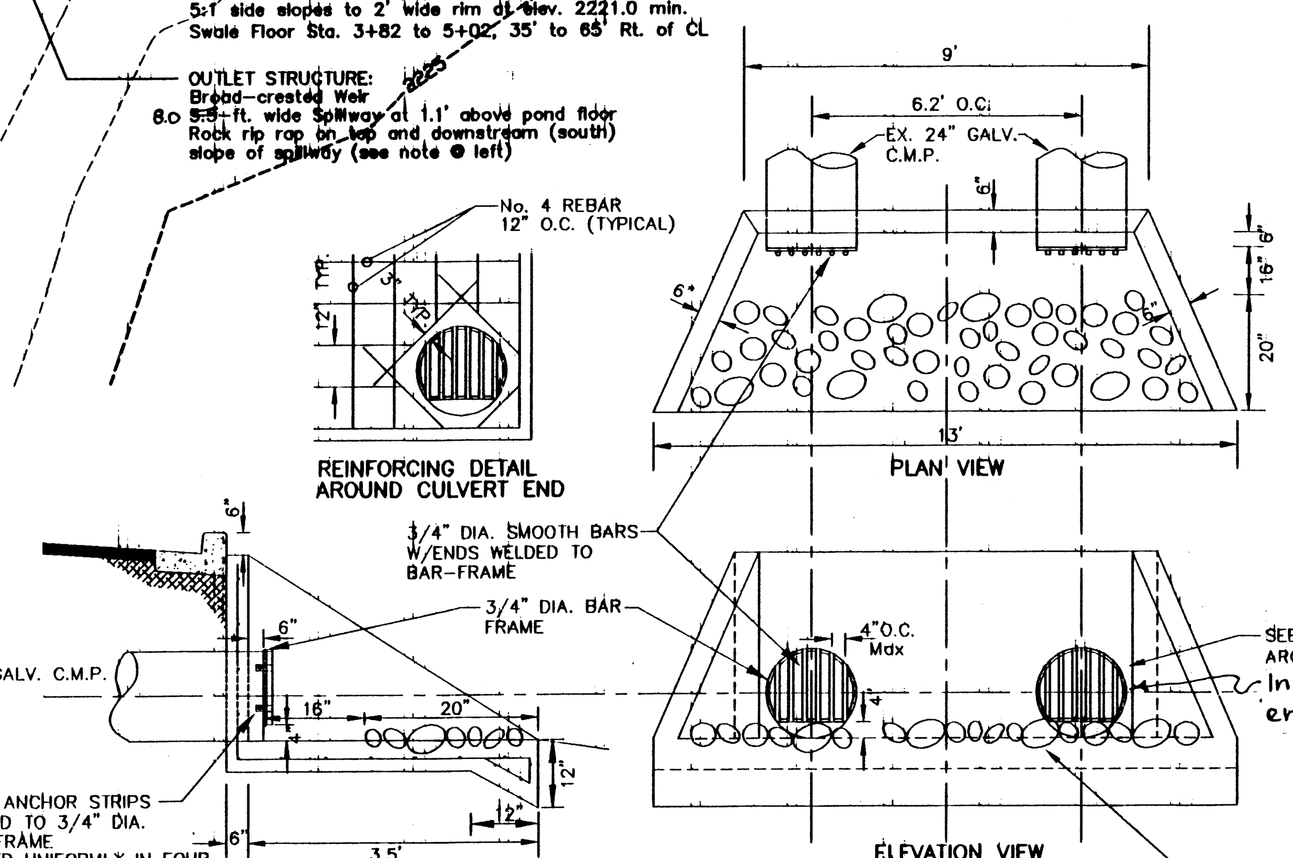

DETAILS: CONCRETE ENDWALL

NOT TO SCALE

WEIR SPILLWAY (VIEW TO NORTH)

SECTION DETAIL: BROAD-CRESTED WEIR

NOT TO SCALE

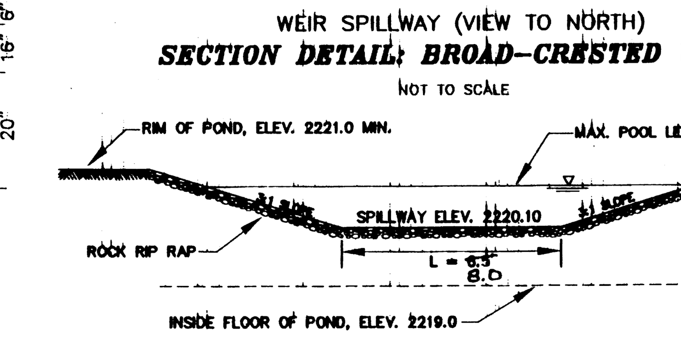

SPOKANE COUNTY ENGINEERS OFFICE
OFFICIAL PUBLIC DOCUMENT ORIGINAL
CONSTRUCTION PLANS
PROJECT #: P1763
DATE ACCEPTED: 12.4.98
ACCEPTANCE EXPIRES: 12.4.01
PROJECT LANE MILES PUBLIC: 0.19
PROJECT LANE MILES PRIVATE: -0-
CONSTRUCTION DOCUMENTATION AND CERTIFIED RECORD DRAWINGS, "AS-BUILTS" ARE REQUIRED PRIOR TO COUNTY ACCEPTANCE AND ESTABLISHMENT OF THE ROADS AND DRAINAGE FACILITIES FOR MAINTENANCE.
PERMIT REQUIRED! (509) 456-3600
NOTIFY PERMIT ENGINEER 2 BUSINESS DAYS PRIOR TO CONSTRUCTION
VOID 2-22-00

"208" POND : SECTION DETAIL

PONDS 1-W and 1-E

NOT TO SCALE

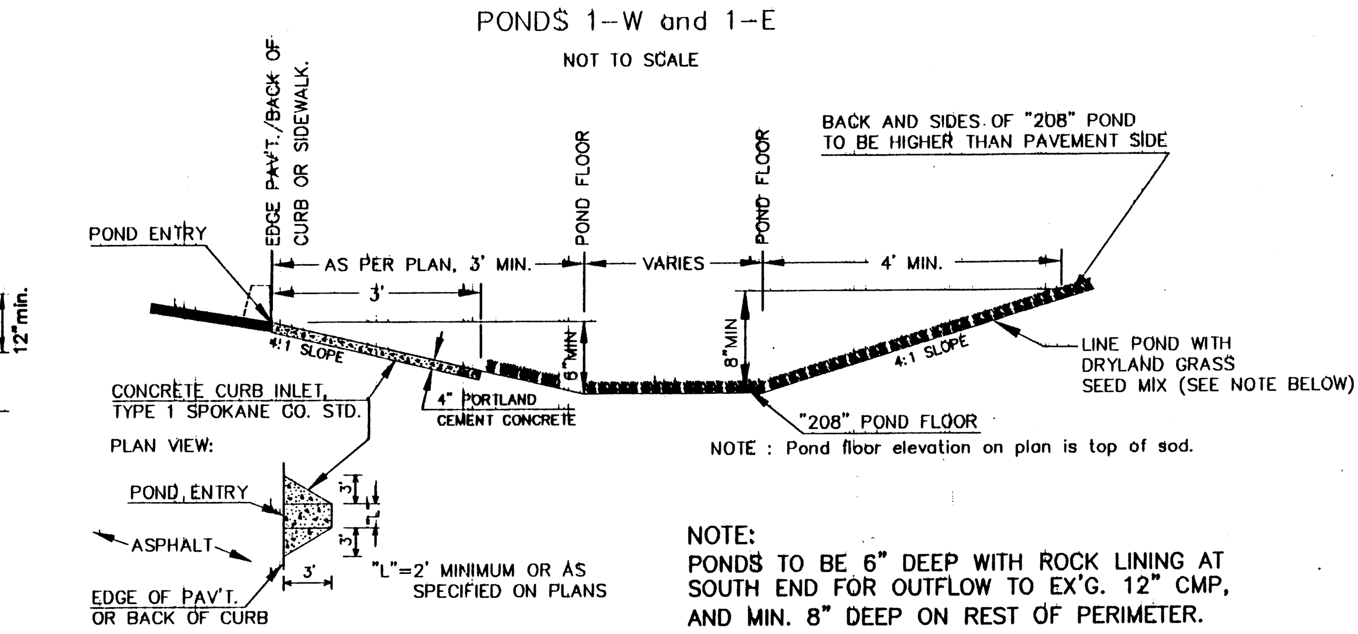

NOTE : Pond floor elevation on plan is top of sod.

NOTE:
PONDS TO BE 6" DEEP WITH ROCK LINING AT SOUTH END FOR OUTFLOW TO EX'G. 12" CMP, AND MIN. 8" DEEP ON REST OF PERIMETER.

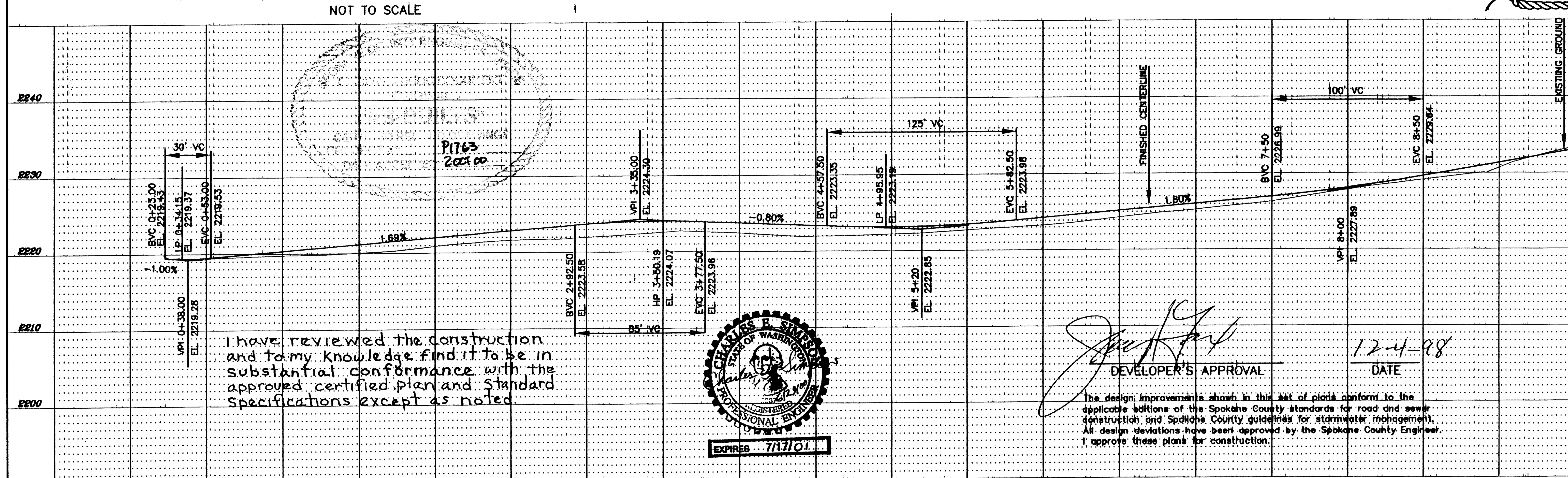

Dryland Grass Seed Mix

Any interceptor ditches, drainage berms and grassed percolation areas are to be seeded with dryland grass seed mix and mulch.

Grass seed: Provide fresh, clean, new-crop seed complying with tolerance of purity and germination established by the Official Seed Analysis of North America. Provide seed mixture composed of grass species and percentages as follows:

10 percent	Elka Perennial Rye
20 percent	Durar Hard Fescue
45 percent	Covar Sheep Fescue
15 percent	Reubens Canadian Bluegrass

Provide mixture composed of grass seed and fertilizer in percentages as follows:

Grass Seed: 90 lbs. per acre
Fertilizer: 16-16-16 timed release composition, 300 lbs. per acre

All seed work is to be completed prior to September 15, or a temporary mulch shall be placed over the denuded surface, and the seeding occur the following spring, after April 15.

CONSTRUCTION NOTES

1) All work and materials shall be in conformance with the "SPOKANE COUNTY STANDARDS FOR ROAD AND SEWER CONSTRUCTION" 1995, and as amended.

2) Locations of existing utilities shown in the plans are approximate. The Contractor shall be responsible for locating all underground utilities. Any conflicting utilities shall be relocated prior to construction of road and drainage facilities.

3) The Contractor is required to have a complete set of the approved road and drainage plans on the job site whenever construction is in progress.

4) If the Contractor discovers any discrepancies between the plans and existing conditions encountered, the Contractor shall immediately notify the Design Engineer and the Spokane County Engineers office.

5) For construction of drywells, install filter fabric (Amoco 4545 or approved equivalent) between the drywell barrel and the washed drainrock, and between the washed drainrock and the native soils.

6) Prior to site construction, the Contractor is responsible for locating underground utilities. Call the underground utility location service at 456-8000 before you dig.

7) The floor of a Grassed Percolation Area (GPA) swale includes the level portion of the floor of the swale, and the side slopes of the swale up to the GPA overflow elevation or top of drywell. The soil located in the floor of the GPA swale shall be a medium to well-draining material, with a minimum infiltration rate of 0.5 inches per hour. The Engineer shall provide a written statement which verifies that all GPA swales conform to this requirement. This written statement shall be submitted to the Spokane County Engineer's Office prior to installing finished landscaping/sod and prior to final acceptance. The swale floor material shall be installed to a native soil stratum which also meets or exceeds this minimum percolation rate of 0.5 inches per hour.

8) An Erosion/Sedimentation Control (ESC) plan is required for this project. Implementation of the ESC plan, and construction, maintenance, and upgrading of the ESC facilities are the responsibility of the Developer until all construction is completed and accepted by Spokane County, or until vegetation is established throughout the site, and accepted by Spokane County, whichever is later.

9) Approval of the ESC plan does not constitute approval of any of the proposed road, storm drainage, grading or utility design elements shown on the ESC plan.

10) The erosion/sedimentation control measures shown are the minimum requirements for the anticipated site conditions. The Contractor shall inspect and maintain these ESC measures daily, and shall maintain and upgrade these measures as necessary to prevent sediment-laden water from either flowing off the site, or into new/existing storm drainage facilities, such as drywells, culverts, or gravel galleries.

11) Geotextile fabric is to be placed on the rims of drywells, catch basins and inlets until such time the vegetation on the site is established and the threat of sediment deposition into the drainage system is mitigated.

BY	DATE	REVISIONS / AS BUILT
CES	9/1/00	As Constructed swales by 32ND
CES	6/28/00	As Constructed
EBS	11/12/98	REVISED STREET PROFILE

DATUM: USGS MON. STAMPED TBM NO. LDW B5 1973 2227; ELEVATION 2226.533; LOCATION 12' SOUTH OF CENTERLINE 32ND AVENUE, 150' EAST OF CENTERLINE MAN o'WAR COURT

SCALE: HORIZONTAL 1"=50'; VERTICAL 1"=10'

DRAWN ED B. SIMPSON — DATE 2/98
CHECKED CHARLES E. SIMPSON
APPROVED CHARLES E. SIMPSON

CHARLES E. SIMPSON, STATE OF WASHINGTON, REGISTERED PROFESSIONAL ENGINEER 12/4/98 — 7/17/99

Founded 1946
Simpson Engineers, Inc.
CIVIL ENGINEERS & LAND SURVEYORS
N. 909 ARGONNE ROAD, SPOKANE WA., 99212-2789
PHONE (509) 926-1322 FAX (509) 926-1323

TYPE OF IMPROVEMENT: STREET
PROJECT NUMBER: 13591
SHEET NUMBER: 1/1

MAN o'WAR COURT

STREET PLAN - PROFILE
STA 0+00 TO STA 10+80

REPLACES SHEETS 1,2,3,5,6 & 7 OF 7 FOR REMINGTON HILL BY THOMAS, DEAN AND HOSKINS, INC. DATED MAY 1995

Rem-MoW-str3.dwg 11-12-98 11:16:21 am PST CALL BEFORE YOU DIG 456-8000

As Submitted to County 6/30/00 As-builts #1763