SHEET INDEX

SHEET 1	COVER AND INDEX SHEET – STREET AND DRAINAGE IMPROVEMENTS
SHEET 2	EROSION / SEDIMENT CONTROL PLAN
SHEET 3	NORMANDIE COURT PLAN AND PROFILE
SHEET 4	GRAVES ROAD PLAN AND PROFILE
SHEET 5	WELLEN LANE PLAN AND PROFILE
SHEET 6	DETAIL SHEET
SHEET 7	DETAIL SHEET

STREET AND DRAINAGE IMPROVEMENTS

PINEWOOD PARK ESTATES

IN THE SOUTH EAST QUARTER OF SECTION 18,
TOWNSHIP 26 NORTH, RANGE 43 EAST, W.M.
SPOKANE COUNTY, WASHINGTON

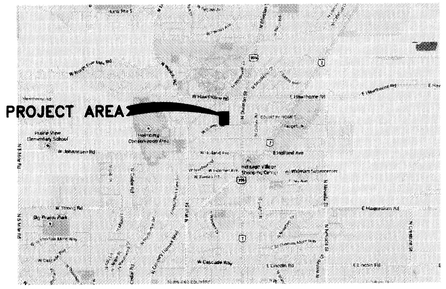

VICINITY MAP
NTS.

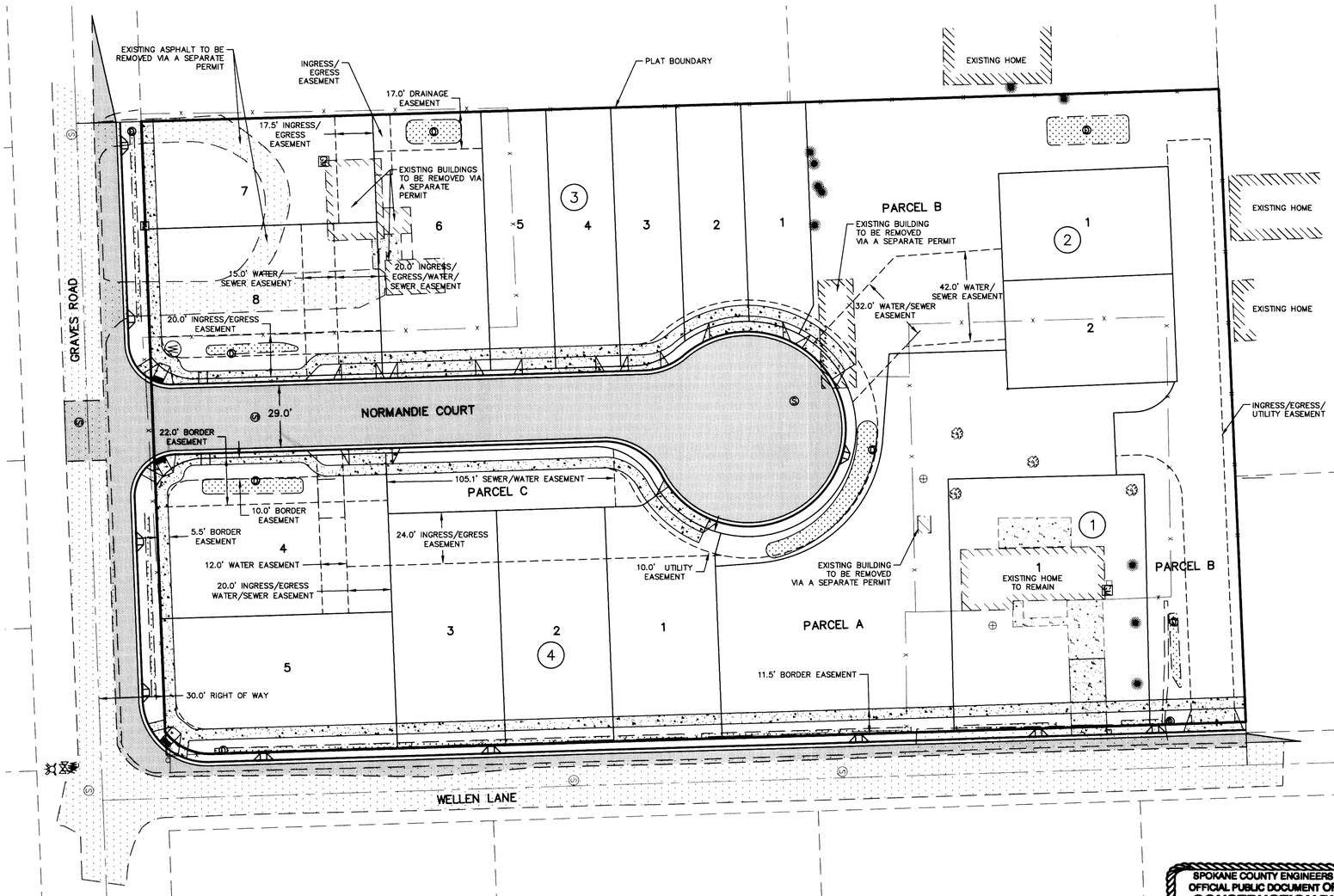

GRAPHIC SCALE

30 0 15 30 60

(IN FEET)
1 inch = 30 ft.

SPOKANE COUNTY ENGINEERS OFFICE
OFFICIAL PUBLIC DOCUMENT ORIGINAL
CONSTRUCTION PLANS
PROJECT #: P-2041
DATE ACCEPTED: 10-10-14
ACCEPTANCE EXPIRES: 10-10-16
PROJECT LANE MILES PUBLIC: 1.9
PROJECT LANE MILES PRIVATE: 0
CONSTRUCTION DOCUMENTATION AND CERTIFIED RECORD DRAWINGS, "AS-BUILTS" ARE REQUIRED PRIOR TO COUNTY ACCEPTANCE AND ESTABLISHMENT OF THE ROADS AND DRAINAGE FACILITIES FOR MAINTENANCE.
PERMIT REQUIRED! (509) 477-3600
NOTIFY PERMIT ENGINEER 2 BUSINESS DAYS PRIOR TO CONSTRUCTION

LEGEND

EXISTING FEATURES

- ASPHALT PAVEMENT
- CURB
- SIDEWALK
- FOUND POINT AS NOTED
- DRYWELL
- GUY WIRE POLE
- POWER POLE
- TELEPHONE ENCLOSURE
- WATER VALVE
- WATER METER
- FIRE HYDRANT
- WELL
- SANITARY SEWER MANHOLE
- WA — WATER LINE
- SS — SANITARY SEWER LINE
- SD — STORM DRAIN LINE / CULVERT
- OHP — POWER LINE (OHP OR UGP)
- OHT — TELEPHONE LINE (OHT OR UGT)
- GA — GAS LINE – UNDERGROUND
- 1924 — CONTOURS
- X — FENCE
- FO — FIBER OPTIC LINE
- TREE

PROPOSED IMPROVEMENTS

- ASPHALT SURFACING – SEE DESIGN PLANS FOR SPECIFICATIONS
- CURB – SEE DESIGN PLANS FOR TYPE
- SIDEWALK – SEE DESIGN PLANS FOR SPECIFICATIONS
- DRYWELL – SEE DESIGN PLANS FOR SPECIFICATIONS
- STORM MANHOLE – SEE DESIGN PLANS FOR SPECIFICATIONS
- CONCRETE INLET
- POWER POLE
- WATER VALVE
- FIRE HYDRANT
- WATER SHUTOFF / WATER VAULT
- SANITARY SEWER MANHOLE
- CO — CLEANOUT (CO)
- 8"WA — WATER LINE (AS SIZED)
- 8"SS — SANITARY SEWER LINE (AS SIZED)
- SD — STORM DRAIN LINE / CULVERT
- 1924 — CONTOURS
- STORM WATER SWALE / POND
- DIRECTION OF SURFACE STORM WATER DRAINAGE
- 1924.50 / 1924.00 — TOP OF CURB ELEVATION / FLOWLINE ELEVATION
- CURB INLET / 1924.00 — CURB INLET / INLET ELEVATION AT FLOWLINE
- 1924.00 — FINISHED GRADE ELEVATION

DEVELOPER DATE

CALL BEFORE YOU DIG 811

No.	DESC. / DATE	BY
5		
4		
3		
2		
1		

storhäug
civil engineering | planning
landscape architecture | surveying
510 east third avenue | spokane, wa | 99202
p 509.242.1000 | f 509.242.1001

SHEET TITLE: COVER AND INDEX SHEET
STREET AND DRAINAGE IMPROVEMENTS

PROJECT TITLE: PINEWOOD PARK ESTATES
SPOKANE COUNTY, WA

SEAL

JEREMY J. STORHAUG
STATE OF WASHINGTON
25966
REGISTERED PROFESSIONAL ENGINEER

DATE	10/09/2014
DRAWN	KRB
CHECKED	AJS
PROJECT NUMBER	13-300
DRAWING NO.	1 OF 7
	COVER

13300-SITE.dwg (1) COVER

P-2041 Roads Drainage

DEFINITION: A TEMPORARY STONE-STABILIZED PAD LOCATED AT POINTS OF VEHICULAR INGRESS AND EGRESS ON A CONSTRUCTION SITE.

PURPOSE: TO REDUCE THE AMOUNT OF MUD, DIRT, ROCK, ETC. TRANSPORTED ONTO PUBLIC ROADS BY MOTOR VEHICLES OR RUNOFF BY CONSTRUCTING A STABILIZED PAD OF ROCK SPALLS AT ENTRANCES TO CONSTRUCTION SITES AND WASHING OF TIRES DURING EGRESS.

CONDITIONS WHERE PRACTICE APPLIES: WHEREVER TRAFFIC WILL BE LEAVING A CONSTRUCTION SITE AND MOVING DIRECTLY ONTO A PUBLIC ROAD OR OTHER PAVED AREAS.

MAINTENANCE: THE ENTRANCE SHALL BE MAINTAINED IN A CONDITION WHICH WILL PREVENT TRACKING OR FLOW OF MUD ONTO PUBLIC RIGHT-OF-WAY. THIS MAY REQUIRE PERIODIC TOP DRESSING WITH 2-INCH STONES, AS CONDITIONS DEMAND, AND REPAIR AND/OR CLEANOUT OF ANY STRUCTURES USED TO TRAP SEDIMENT. ALL MATERIALS SPILLED, DROPPED, WASHED OR TRACKED FROM VEHICLES ONTO ROADWAYS OR INTO STORM DRAINS MUST BE REMOVED.

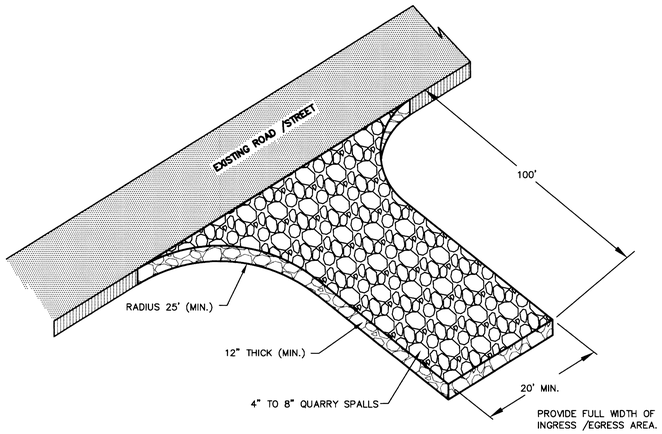

STABILIZED CONSTRUCTION ENTRANCE/ TIRE WASH NTS (CE)

DEFINITION: A TEMPORARY SEDIMENT BARRIER CONSISTING OF A FILTER FABRIC STRETCHED ACROSS AND ATTACHED TO SUPPORTING POSTS AND ENTRENCHED. THE FILTER FENCE IS CONSTRUCTED OF STAKES AND SYNTHETIC FILTER FABRIC WITH A RIGID WIRE FENCE BACKING WHERE NECESSARY FOR SUPPORT.

PURPOSE: 1. TO INTERCEPT AND DETAIN SMALL AMOUNTS OF SEDIMENT UNDER SHEET FLOW CONDITIONS FROM DISTURBED AREAS DURING CONSTRUCTION OPERATIONS IN ORDER TO PREVENT SEDIMENT FROM LEAVING THE SITE.

2. TO DECREASE THE VELOCITY OF SHEET FLOWS.

CONDITIONS WHERE PRACTICE APPLIES: FILTER FENCES MUST BE PROVIDED JUST UPSTREAM OF THE POINT(S) OF DISCHARGE OF RUNOFF FROM A SITE, BEFORE THE FLOW BECOMES CONCENTRATED. THEY MAY ALSO BE REQUIRED:

1. BELOW DISTURBED AREAS WHERE RUNOFF MAY OCCUR IN THE FORM OF SHEET AND RILL EROSION; WHEREVER RUNOFF HAS THE POTENTIAL TO IMPACT DOWNSTREAM RESOURCES.

2. PERPENDICULAR TO MINOR SWALES OR DITCH LINES FROM CONTRIBUTING DRAINAGE AREAS UP TO ONE ACRE IN SIZE.

3. CONTRACTOR SHALL COORDINATE WITH DESIGN ENGINEER FOR ACTUAL PLACEMENT LOCATIONS.

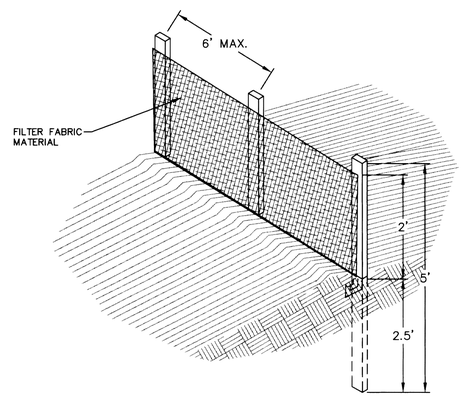

STANDARD NOTES: A. THE FILTER FABRIC FENCE SHALL BE PURCHASED IN A CONTINUOUS ROLL CUT TO THE LENGTH OF THE BARRIER TO AVOID USE OF JOINTS. WHEN JOINTS ARE NECESSARY, OVERLAP FILTER CLOTH AND SECURELY FASTEN BOTH ENDS TO THE POST.

B. POSTS SHALL BE SPACED A MAXIMUM OF 6 FEET APART AND DRIVEN SECURELY INTO THE GROUND A MINIMUM OF 30 INCHES (WHERE PHYSICALLY POSSIBLE).

C. A TRENCH SHALL BE EXCAVATED APPROXIMATELY 8 INCHES WIDE AND 12 INCHES DEEP ALONG THE LINE OF POSTS AND UPSLOPE FROM THE BARRIER. THE TRENCH SHALL BE CONSTRUCTED TO FOLLOW THE CONTOURS.

D. WHEN SLIT FILM FILTER FABRIC IS USED, A WIRE MESH SUPPORT FENCE SHALL BE FASTENED SECURELY TO THE UPSLOPE SIDE OF THE POSTS USING HEAVY-DUTY WIRE STAPLES AT LEAST 1 INCH LONG, TIE WIRES OR HOG RINGS. THE WIRE SHALL EXTEND INTO THE TRENCH A MINIMUM OF 4 INCHES AND SHALL NOT EXTEND MORE THAN 36 INCHES ABOVE THE ORIGINAL GROUND SURFACE.

E. SLIT FILM FILTER FABRIC SHALL BE WIRED TO THE FENCE, AND 20 INCHES OF THE FABRIC SHALL EXTEND INTO THE TRENCH. THE FABRIC SHALL NOT EXTEND MORE THAN 36 INCHES ABOVE THE ORIGINAL GROUND SURFACE. FILTER FABRIC SHALL NOT BE STAPLED TO EXISTING TREES. OTHER TYPES OF FABRIC MAY BE STAPLED TO THE FENCE.

F. WHEN EXTRA-STRENGTH OR MONOFILAMENT FABRIC AND CLOSER POST SPACING ARE USED, THE WIRE MESH SUPPORT FENCE MAY BE ELIMINATED. IN SUCH A CASE, THE FILTER FABRIC IS STAPLED OR WIRED DIRECTLY TO THE POSTS WITH ALL OTHER PROVISIONS OF STANDARD NOTE "E" APPLYING. EXTRA CARE SHOULD BE USED WHEN JOINING OR OVERLAPPING THESE STIFFER FABRICS.

G. LOCAL GOVERNMENTS MAY SPECIFY THE USE OF WASHED GRAVEL.

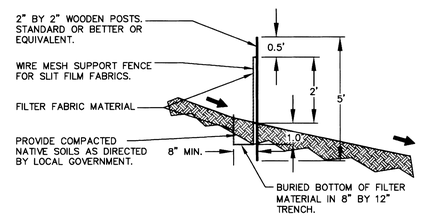

FILTER FENCE NTS (FF)

1. THE FOLLOWING CONSTRUCTION SEQUENCE SHALL BE FOLLOWED IN ORDER TO BEST MINIMIZE THE POTENTIAL FOR EROSION AND SEDIMENTATION CONTROL PROBLEMS:
   - 1.a. CLEAR AND GRUB SUFFICIENTLY FOR INSTALLATION OF TEMPORARY ESC BMPS;
   - 1.b. INSTALL TEMPORARY ESC BMPS, CONSTRUCTING SEDIMENT TRAPPING BMPS AS ONE OF THE FIRST STEPS PRIOR TO GRADING;
   - 1.c. CLEAR, GRUB AND ROUGH GRADE FOR ROADS, TEMPORARY ACCESS POINTS AND UTILITY LOCATIONS;
   - 1.d. STABILIZE ROADWAY APPROACHES AND TEMPORARY ACCESS POINTS WITH THE APPROPRIATE CONSTRUCTION ENTRY BMP;
   - 1.e. CLEAR, GRUB AND GRADE INDIVIDUAL LOTS OR GROUPS OF LOTS;
   - 1.f. TEMPORARILY STABILIZE, THROUGH RE-VEGETATION OR OTHER APPROPRIATE BMPS, LOTS OR GROUPS OF LOTS IN SITUATIONS WHERE SUBSTANTIAL CUT OR FILL SLOPES ARE A RESULT OF THE SITE GRADING;
   - 1.g. CONSTRUCT ROADS, BUILDINGS, PERMANENT STORMWATER FACILITIES (I.E. INLETS, PONDS, UIC FACILITIES, ETC.);
   - 1.h. PROTECT ALL PERMANENT STORMWATER FACILITIES UTILIZING THE APPROPRIATE BMPS;
   - 1.i. INSTALL PERMANENT ESC CONTROLS, WHEN APPLICABLE; AND,
   - 1.j. REMOVE TEMPORARY ESC CONTROLS WHEN:
     - 1.j.a. PERMANENT ESC CONTROLS, WHEN APPLICABLE, HAVE BEEN COMPLETELY INSTALLED;
     - 1.j.b. ALL LAND-DISTURBING ACTIVITIES THAT HAVE THE POTENTIAL TO CAUSE EROSION OR SEDIMENTATION PROBLEMS HAVE CEASED; AND,
     - 1.j.c. VEGETATION HAD BEEN ESTABLISHED IN THE AREAS NOTED AS REQUIRING VEGETATION ON THE ACCEPTED ESC PLAN ON FILE WITH THE LOCAL JURISDICTION.
2. INSPECT ALL ROADWAYS, AT THE END OF EACH DAY, ADJACENT TO THE CONSTRUCTION ACCESS ROUTE. IF IT IS EVIDENT THAT SEDIMENT HAS BEEN TRACKED OFF SITE AND/OR BEYOND THE ROADWAY APPROACH, CLEANING IS REQUIRED.
3. IF SEDIMENT REMOVAL IS NECESSARY PRIOR TO STREET WASHING, IT SHALL BE REMOVED BY SHOVELING OR PICKUP SWEEPING AND TRANSPORTED TO A CONTROLLED SEDIMENT DISPOSAL AREA.
4. IF STREET WASHING IS REQUIRED TO CLEAN SEDIMENT TRACKED OFF SITE, ONCE SEDIMENT HAS BEEN REMOVED, STREET WASH WASTEWATER SHALL BE CONTROLLED BY PUMPING BACK ON-SITE OR OTHERWISE PREVENTED FROM DISCHARGING INTO SYSTEMS TRIBUTARY TO WATERS OF THE STATE.
5. RESTORE CONSTRUCTION ACCESS ROUTE EQUAL TO OR BETTER THAN THE PRE-CONSTRUCTION CONDITION.
6. RETAIN THE DUFF LAYER, NATIVE TOPSOIL, AND NATURAL VEGETATION IN AN UNDISTURBED STATE TO THE MAXIMUM EXTENT PRACTICAL.
7. INSPECT SEDIMENT CONTROL BMPS WEEKLY AT A MINIMUM, DAILY DURING A STORM EVENT, AND AFTER ANY DISCHARGE FROM THE SITE (STORMWATER OR NON-STORMWATER). THE INSPECTION FREQUENCY MAY BE REDUCED TO ONCE A MONTH IF THE SITE IS STABILIZED AND INACTIVE.
8. CONTROL FUGITIVE DUST FROM CONSTRUCTION ACTIVITY IN ACCORDANCE WITH THE STATE AND/OR LOCAL AIR QUALITY CONTROL AUTHORITIES WITH JURISDICTION OVER THE PROJECT AREA.
9. STABILIZE EXPOSED UNWORKED SOILS (INCLUDING STOCKPILES), WHETHER AT FINAL GRADE OR NOT, WITHIN 10 DAYS DURING THE REGIONAL DRY SEASON (JULY 1 THROUGH SEPTEMBER 30) AND WITHIN 5 DAYS DURING THE REGIONAL WET SEASON (OCTOBER 1 THROUGH JUNE 30). SOILS MUST BE STABILIZED AT THE END OF A SHIFT BEFORE A HOLIDAY WEEKEND IF NEEDED BASED ON THE WEATHER FORECAST. THIS TIME LIMIT MAY ONLY BE ADJUSTED BY A LOCAL JURISDICTION WITH A "QUALIFIED LOCAL PROGRAM," IF IT CAN BE DEMONSTRATED THAT THE RECENT PRECIPITATION JUSTIFIES A DIFFERENT STANDARD AND MEETS THE REQUIREMENTS SET FOURTH IN THE CONSTRUCTION STORMWATER GENERAL PERMIT.
10. PROTECT INLETS, DRYWELLS, CATCH BASINS AND OTHER STORMWATER MANAGEMENT FACILITIES FROM SEDIMENT, WHETHER OR NOT FACILITIES ARE OPERABLE.
11. KEEP ROADS ADJACENT TO INLETS CLEAN.
12. INSPECT INLETS WEEKLY AT A MINIMUM AND DAILY DURING STORM EVENTS.
13. CONSTRUCT STORMWATER CONTROL FACILITIES (DETENTION/RETENTION STORAGE POND OR SWALES) BEFORE GRADING BEGINS. THESE FACILITIES SHALL BE OPERATIONAL BEFORE THE CONSTRUCTION OF IMPERVIOUS SITE IMPROVEMENTS.
14. STOCKPILE MATERIALS (SUCH AS TOPSOIL) ON SITE, KEEPING OFF OF ROADWAY AND SIDEWALKS.
15. COVER, CONTAIN AND PROTECT ALL CHEMICALS, LIQUID PRODUCTS, PETROLEUM PRODUCT, AND NONINERT WASTES PRESENT ON SITE FROM VANDALISM (SEE CHAPTER 173-304 WAC FOR THE DEFINITION OF INERT WASTE), USE SECONDARY CONTAINMENT FOR ON-SITE FUELING TANKS.
16. CONDUCT MAINTENANCE AND REPAIR OF HEAVY EQUIPMENT AND VEHICLES INVOLVING OIL CHANGES, HYDRAULIC SYSTEM REPAIRS, SOLVENT AND DEGREASING OPERATIONS, FUEL TANK DRAIN DOWN AND REMOVAL, AND OTHER ACTIVITIES THAT MAY RESULT IN DISCHARGE OR SPILLAGE OF POLLUTANTS TO THE GROUND OR INTO STORMWATER RUNOFF USING SPILL PREVENTION MEASURES, SUCH AS DRIP PANS. CLEAN ALL CONTAMINATED SURFACES IMMEDIATELY FOLLOWING ANY DISCHARGE OR SPILL INCIDENT. IF RAINING OVER EQUIPMENT OR VEHICLE, PERFORM EMERGENCY REPAIRS ON SITE USING TEMPORARY PLASTIC BENEATH THE VEHICLE.
17. CONDUCT APPLICATION OF AGRICULTURAL CHEMICALS, INCLUDING FERTILIZERS AND PESTICIDES, IN SUCH A MANNER, AND AT APPLICATION RATES, THAT INHIBITS THE LOSS OF CHEMICALS INTO STORMWATER RUNOFF FACILITIES. AMEND MANUFACTURER'S RECOMMENDED APPLICATION RATES AND PROCEDURES TO MEET THIS REQUIREMENT, IF NECESSARY.
18. INSPECT ON A REGULAR BASIS (AT A MINIMUM WEEKLY, AND DAILY DURING/AFTER A RUNOFF PRODUCING STORM EVENT) AND MAINTAIN ALL EROSION AND SEDIMENT CONTROL BMPS TO ENSURE SUCCESSFUL PERFORMANCE OF THE BMPS. NOTE THAT INLET PROTECTION DEVICES SHALL BE CLEANED OR REMOVED AND REPLACE BEFORE SIX INCHES OF SEDIMENT CAN ACCUMULATE.
19. REMOVE TEMPORARY ESC BMPS WITHIN 30 DAYS AFTER THE TEMPORARY BMPS ARE NO LONGER NEEDED. PERMANENTLY STABILIZE AREAS THAT ARE DISTURBED DURING THE REMOVAL PROCESS.
20. BMP'S SHALL BE IN ACCORDANCE WITH CHAPTER 7 OF THE STORMWATER MANAGEMENT MANUAL FOR EASTERN WASHINGTON.

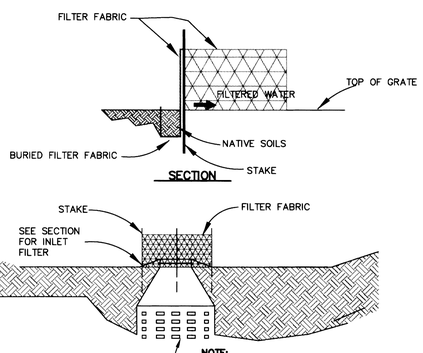

NOTE:

1. ALL DRYWELLS, INLETS, CATCH BASIN AND ANY OTHER STORMDRAIN FIXTURES WITH GRATED INLETS SHALL BE PROTECTED.
2. PROTECTION SHALL REMAIN IN PLACE UNTIL VEGETATION IS ESTABLISHED.

TEMPORARY INLET PROTECTION NTS. (IP)

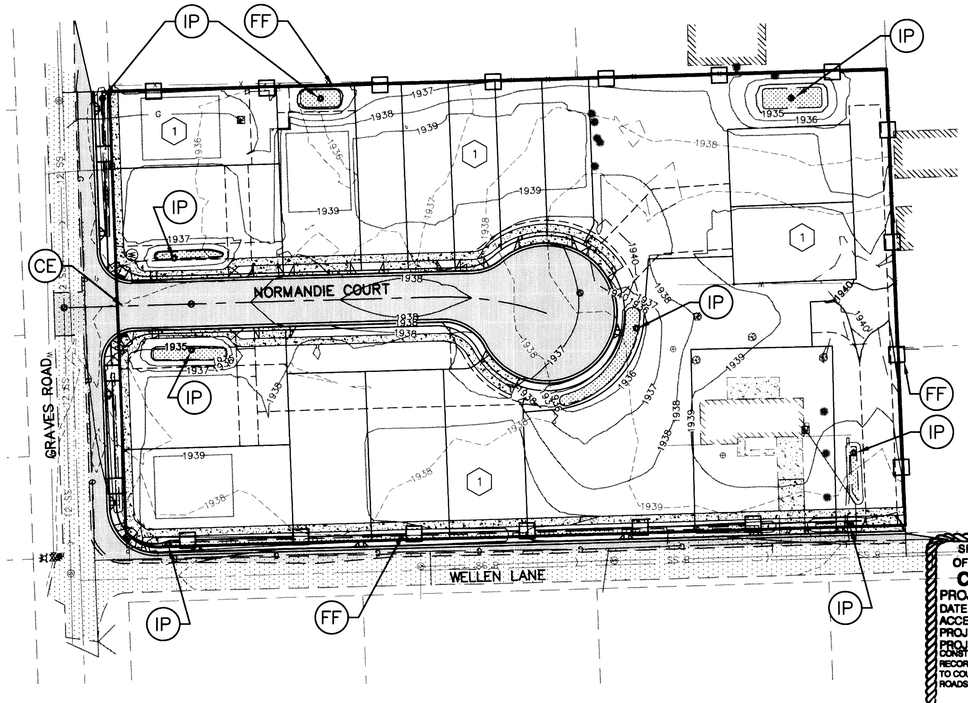

Provide fresh, clean new crop seed complying with tolerance for purity and germination established by Official Seed Analysts of North America. Provide seed mixture composed of grass species and percentages as follows:

20 percent Elka Perennial Rye

20 percent Durar Hard Fescue

45 percent Covar Sheep /Fescue

15 percent Reubens Canadian Bluegrass

Provide mixture composed of grass seed and fertilizer in percentages as follows:

Grass seed mixture: 90 lbs. per acre
Fertilizer: 16:16:16 timed release composition, 300 lbs. per acre

All seeding of slopes shall be done in accordance with WSDOT Standard Specifications.

Contractor shall irrigate seeded areas until seed has germinated and has been accepted by Spokane County.

SEEDING SPECIFICATIONS

SPOKANE COUNTY ENGINEERS OFFICE
OFFICIAL PUBLIC DOCUMENT ORIGINAL
CONSTRUCTION PLANS
PROJECT #: P-2041
DATE ACCEPTED: 10-10-14
ACCEPTANCE EXPIRES: 10-10-16
PROJECT LANE MILES PUBLIC: 1.3
PROJECT LANE MILES PRIVATE: 0
CONSTRUCTION DOCUMENTATION AND CERTIFIED RECORD DRAWINGS, "AS-BUILTS" ARE REQUIRED PRIOR TO COUNTY ACCEPTANCE AND ESTABLISHMENT OF THE ROADS AND DRAINAGE FACILITIES FOR MAINTENANCE.
PERMIT REQUIRED! (509) 477-3600
NOTIFY PERMIT ENGINEER 2 BUSINESS DAYS PRIOR TO CONSTRUCTION

TABLE

(1) PRIVATE IMPROVEMENTS, INCLUDING ANY GRADING UNASSOCIATED WITH PUBLIC ROAD INFRASTRUCTURE IMPROVEMENTS AS DETAILED IN THESE PLANS, TO BE VIA. A SEPARATE PERMIT

DATUM
BENCHMARK
BASED ON WSDOT MONUMENTATION
TBM: FOUND IRON PIPE AT NORTHEAST CORNER OF PLAT.
ELEVATION = 1937.93 (NAVD 88)

OWNER / APPLICANT / CONTACT PERSON

GREG SICILIA
8622 E WOODLAND PARK DR,
SPOKANE, WA 99217

PROJECT / SITE DESCRIPTION

THE PROPOSED PROJECT INCLUDES THE DEVELOPMENT OF 15 RESIDENTIAL LOTS AND SOME COMMUNITY LOTS AS PART OF A P.U.D. PROJECT AND IS LOCATED NORTH OF GRAVES AND WEST OF WELLEN LANE. IN THE SOUTHERN HALF OF SECTION 18, TOWNSHIP 26, RANGE 43, W.M.

SOIL TYPE

THE SOILS IN THIS REGION OF THE SUBJECT PROJECT HAVE BEEN IDENTIFIED AS THE MARBLE VARIANT SERIES. MARBLE VARIANT SOILS ARE CLASSIFIED AS TYPE "B". THE STORMWATER ANALYSIS WAS ANALYZED BASED UPON THESE SOIL GROUPINGS.

ESC MEASURES

FILTER FENCE SHALL BE USED TO AID IN CONTAINING ANY SEDIMENT ON THE SITE DURING CONSTRUCTION. STABILIZED CONSTRUCTION ENTRANCES SHALL BE USED AT POINTS OF INGRESS AND EGRESS FOR CONSTRUCTION VEHICLES. DRYWELL/INLET PROTECTION SHALL BE USED AT ALL STORMWATER PIPE INLETS OR DRYWELLS.

REFER TO PLAN VIEW ON THIS SHEET FOR APPROXIMATE LOCATION OF THE ABOVE ITEMS.

PROJECT ADDRESS

220 W. GRAVES ROAD
SPOKANE, WA 99218

EXISTING CONDITIONS

THE SITE IS LARGELY VACANT, WITH AN EXISTING RESIDENCE ON THE NORTH PORTION. AT THE TIME OF TOPOGRAPHIC SURVEY A RESIDENCE EXISTED AT THE SOUTHWEST CORNER OF THE SITE, BUT STORHAUG HAS BEEN INFORMED IT WILL BE DEMOLISHED PRIOR TO START OF CONSTRUCTION.

GRAPHIC SCALE
50 0 25 50 100
(IN FEET)
1 inch = 50 ft.

DEVELOPER DATE

CALL BEFORE YOU DIG 811

No.	DESC. / DATE	BY
5		
4		
3		
2		
1		

storhaug
civil engineering | planning
landscape architecture | surveying
510 east third avenue | spokane, wa | 99202
p 509.242.1000 | f 509.242.1001

SHEET TITLE: EROSION / SEDIMENT CONTROL PLAN

PROJECT TITLE: PINEWOOD PARK ESTATES
SPOKANE COUNTY, WA

SEAL

DATE	10/09/2014
DRAWN	KRB
CHECKED	AJS
PROJECT NUMBER	13-300
DRAWING NO.	2 OF 7
	EROSION

13300-SITE.dwg (2) ESC DETAILS

P-2041 Eng Road + Drainage

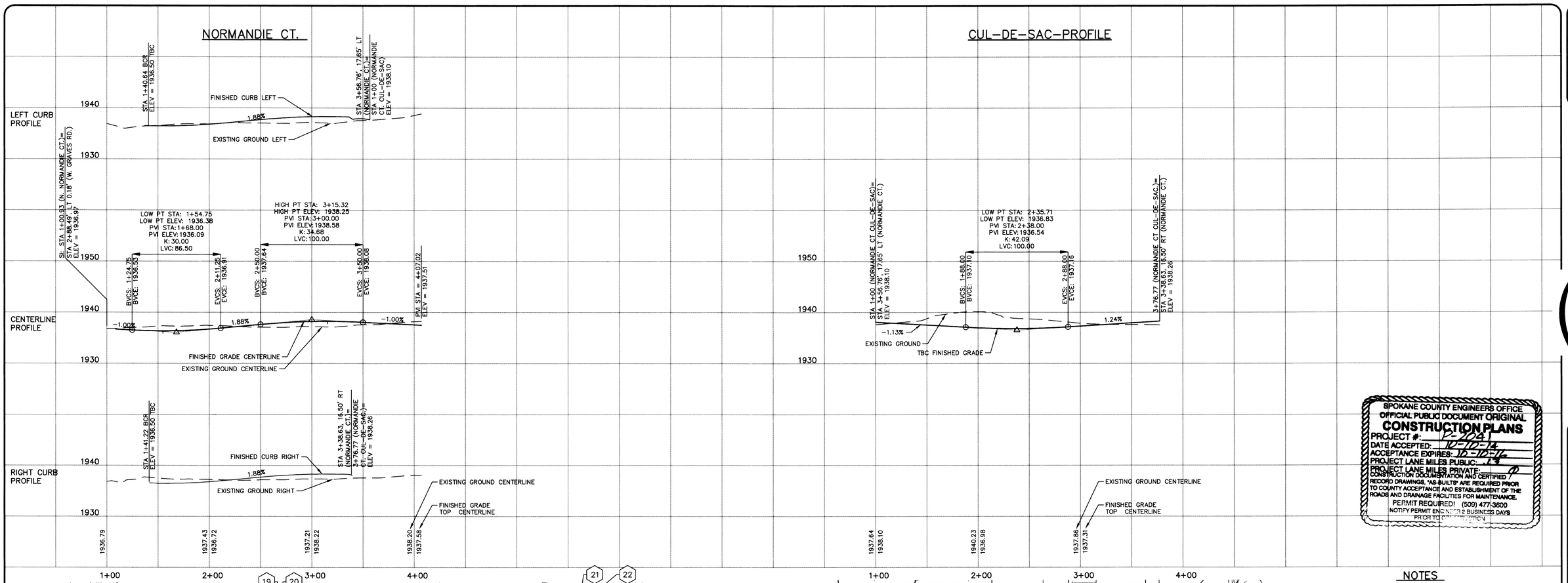

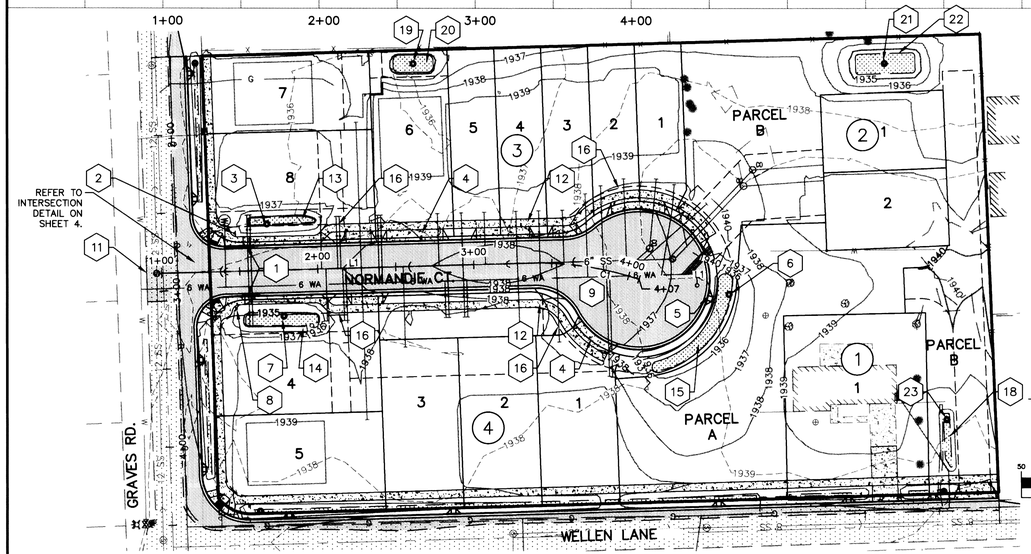

GRAPHIC SCALE

50 0 25 50 100

(IN FEET)
HORZ: 1 inch = 50 ft.
VERT: 1 inch = 10 ft.

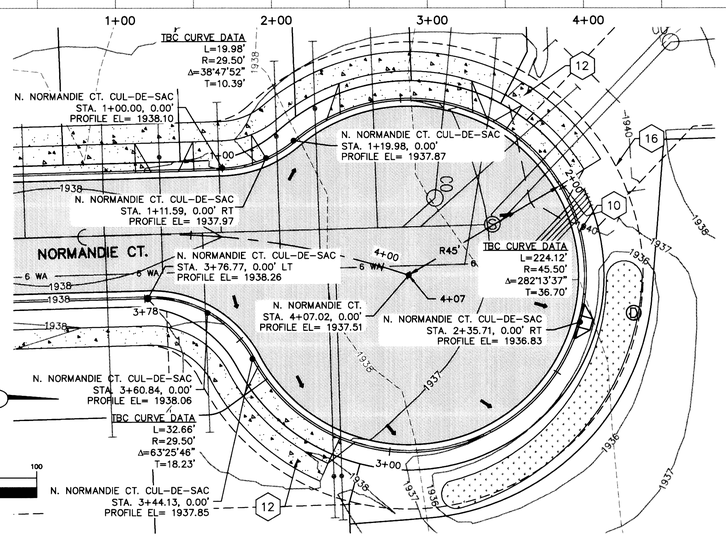

NORMANDIE COURT CUL-DE-SAC DETAIL

SCALE: 1" = 20'

NOTES

1. SEE CONSTRUCTION SPECIFICATIONS SHOWN ON DETAIL SHEET.
2. ALL CURB RETURNS ARE 30' RADIUS AT BACK OF CURB UNLESS OTHERWISE SHOWN.
3. ALL CURB AND OFFSET DATA IS REFERENCED TO TOP BACK OF CURB, UNLESS OTHERWISE NOTED.
4. 2.0' (MIN.) OF COVER SHALL BE MAINTAINED OVER ALL STORM DRAIN PIPES.
5. CURB INLETS SHALL BE CONSTRUCTED 1" LOWER THAN THE FLOW LINE OF THE CURB. ASPHALT AND CURB TO HAVE SMOOTH TAPER INTO CURB INLETS.
6. W.S.D.O.T. TYPE 2 INLETS SHALL BE PLACED SO THAT THE LONGER SIDE OF THE STRUCTURE IS PERPENDICULAR TO THE EDGE OF PAVEMENT.
7. CONTRACTOR SHALL VERIFY UTILITY SERVICE ELEVATIONS AT ALL CROSSINGS PRIOR TO CONSTRUCTION OF ROAD AND DRAINAGE IMPROVEMENTS.
8. IRRIGATION SYSTEM FOR SWALES SHALL BE PROVIDED BY CONTRACTOR/DEVELOPER. IRRIGATION SYSTEM SHALL BE DESIGN/BUILD.
9. LOCATIONS OF EXISTING UTILITIES SHOWN ON THE PLANS ARE APPROXIMATE. THE CONTRACTOR SHALL BE RESPONSIBLE FOR LOCATING ALL UNDERGROUND AND OVERHEAD UTILITIES, EXISTING OVERHEAD POWER, TELEPHONE AND OTHER EXISTING UTILITIES. UTILITIES SHALL BE RELOCATED AS NEEDED PRIOR TO CONSTRUCTION. CONTRACTOR SHALL COORDINATE WITH APPROPRIATE REGULATORY AGENCIES AND UTILITY COMPANIES FOR ALL REQUIREMENTS.

SPOKANE COUNTY ENGINEERS OFFICE
OFFICIAL PUBLIC DOCUMENT ORIGINAL
CONSTRUCTION PLANS
PROJECT #: P-2041
DATE ACCEPTED: 10-10-14
ACCEPTANCE EXPIRES: 10-10-16
PROJECT LANE MILES PUBLIC: 1.3
PROJECT LANE MILES PRIVATE: 0
CONSTRUCTION DOCUMENTATION AND CERTIFIED RECORD DRAWINGS, "AS-BUILTS" ARE REQUIRED PRIOR TO COUNTY ACCEPTANCE AND ESTABLISHMENT OF THE ROADS AND DRAINAGE FACILITIES FOR MAINTENANCE.
PERMIT REQUIRED! (509) 477-3600
NOTIFY PERMIT ENGINEER 2 BUSINESS DAYS PRIOR TO CONSTRUCTION

CENTERLINE CURVE TABLE

CURVE	RADIUS	LENGTH	DELTA	TANGENT	CHORD L	BEARING
C1	198.91	70.86	020°24'39"	35.81	70.48	N08°32'44"E

DATUM

BENCHMARK

BASED ON WSDOT MONUMENTATION
TBM: FOUND IRON PIPE AT NORTHEAST CORNER OF PLAT.
ELEVATION = 1937.93 (NAVD 88)

LINE TABLE

LINE	LENGTH	BEARING
L1	236.16	N1° 37' 48.35"W

TABLE

1. CURB INLET, TYPE 2, PER SPOKANE COUNTY STD. B-9. GRADES AT THE OUTLET TO ALLOW STORMWATER TO SWALE BOTTOM. STA. 1+54.75, 16.50' LT. STA. 1+54.75, 16.50' RT.
2. STOP AND STREET SIGNS PER M.U.T.C.D. AND SPOKANE COUNTY STANDARDS.
3. SPOKANE COUNTY DRYWELL STD. B-1a TYPE "A" W/ TYPE 4 FRAME & GRATE STA.= 1+68.26, 29.88' LT. RIM EL.= 1935.32 POND BOTTOM EL. = 1934.82 AT DRYWELL
4. URBAN DRIVEWAY APPROACH PER SPOKANE COUNTY STD. A-4. WIDTH: SEE BELOW, MIDDLE STA. PROVIDED NORMANDIE: STA. 2+26.81 LT; W = 16.0' NORMANDIE: STA. 2+31.06 RT; W = 20.0' NORMANDIE: STA. 2+62.81 LT; W = 36.0' NORMANDIE: STA. 3+19.31 LT; W = 34.0 CUL-DE-SAC: STA. 1+00.27; W = 15.06' CUL-DE-SAC: STA. 1+51.52; W = 34.00' CUL-DE-SAC: STA. 1+89.08; W = 20.00' CUL-DE-SAC: STA. 3+25.55; W = 24.00'
5. CURB INLET TYPE 1 PER SPOKANE COUNTY STD. B-8. SEE DETAIL SHEET FOR MORE INFORMATION. CUL-DE-SAC STA. 2+35.71, 0.00' LT.
6. SPOKANE COUNTY DRYWELL STD. B-1a TYPE "A" W/ TYPE 4 FRAME & GRATE CUL-DE-SAC STA.= 2+31.18, 12.92' LT. RIM EL.= 1936.00 POND BOTTOM EL.= 1935.50 AT DRYWELL
7. SPOKANE COUNTY DRYWELL STD. B-1a TYPE "A" W/ TYPE 4 FRAME & GRATE STA.= 1+77.60, 29.62' RT. RIM EL.= 1935.32 POND BOTTOM EL.= 1934.82 AT DRYWELL
8. "NO OUTLET" SIGN PER M.U.T.C.D. STANDARDS.
9. ASPHALT PAVEMENT. SEE DETAIL SHEET FOR MORE INFORMATION.
10. TYPE "B" CURB AND GUTTER PER SPOKANE COUNTY STD. A-3.
11. SAWCUT, REMOVE AND REPLACE PAVEMENT PER REGIONAL PAVEMENT POLICY. SEE UTILITY PLANS FOR MORE INFORMATION.
12. SIDEWALK, PER SPOKANE COUNTY STD. PLAN A-4.
13. SWALE "A" SIDE SLOPES = 3:1 BOTTOM EL. = 1934.82 BOTTOM AREA = 176 S.F. DEPTH = 1.0 FT. SEE DETAIL SHEET FOR MORE INFORMATION.
14. SWALE "B" SIDE SLOPES = 3:1 BOTTOM EL. = 1934.82 BOTTOM AREA = 322 S.F. DEPTH = 1.0 FT. SEE DETAIL SHEET FOR MORE INFORMATION.
15. SWALE "C" SIDE SLOPES = 3:1 BOTTOM EL. = 1935.50 BOTTOM AREA = 642 S.F. DEPTH = 1.0 FT. SEE DETAIL SHEET FOR MORE INFORMATION.
16. UTILITY EASEMENT 10' OFF R.O.W. LINE
17. NOT USED
18. SWALE "E" SIDE SLOPES = 3:1 BOTTOM EL. = 1937.10 BOTTOM AREA = 130 S.F. DEPTH = 1.0 FT. SEE DETAIL SHEET FOR MORE INFORMATION.
19. SPOKANE COUNTY DRYWELL STD. B-1a TYPE "A" W/ TYPE 4 FRAME & GRATE STA.= 2+64.94, 130.05' LT. RIM EL.= 1935.21 POND BOTTOM EL.= 1934.71 AT DRYWELL
20. SWALE "F" SIDE SLOPES = 3:1 BOTTOM EL. = 1934.71 BOTTOM AREA = 272 S.F. DEPTH = 1.0 FT. SEE DETAIL SHEET FOR MORE INFORMATION.
21. SPOKANE COUNTY DRYWELL STD. B-1a TYPE "A" W/ TYPE 4 FRAME & GRATE RIM EL.= 1934.81 POND BOTTOM EL.= 1934.31 AT DRYWELL
22. SWALE "G" SIDE SLOPES = 3:1 BOTTOM EL. = 1934.31 BOTTOM AREA = 491 S.F. DEPTH = 1.0 FT. SEE DETAIL SHEET FOR MORE INFORMATION.
23. SPOKANE COUNTY DRYWELL STD. B-1a TYPE "A" W/ TYPE 4 FRAME & GRATE RIM EL.= 1937.60 POND BOTTOM EL.= 1937.10 AT DRYWELL

DEVELOPER DATE

CALL BEFORE YOU DIG 811

P-2041 Eng Road & Drainage

No.	DESC. / DATE	BY
5		
4		
3		
2		
1		

storhaug
civil engineering | planning
landscape architecture | surveying
510 east third avenue | spokane, wa | 99202
p 509.242.1000 | f 509.242.1001

SHEET TITLE: NORMANDIE COURT STREET PLAN & PROFILE STA. 1+00 TO 4+07

PROJECT TITLE: PINEWOOD PARK ESTATES SPOKANE COUNTY, WA

SEAL

JERRY A. STORHAUG STATE OF WASHINGTON 25506 REGISTERED PROFESSIONAL ENGINEER

DATE	10/09/2014
DRAWN	KRB
CHECKED	AJS
PROJECT NUMBER	13-300
DRAWING NO.	3 OF 7
	STREET

13300-SITE.dwg (3)-STREET

GRAVES ROAD

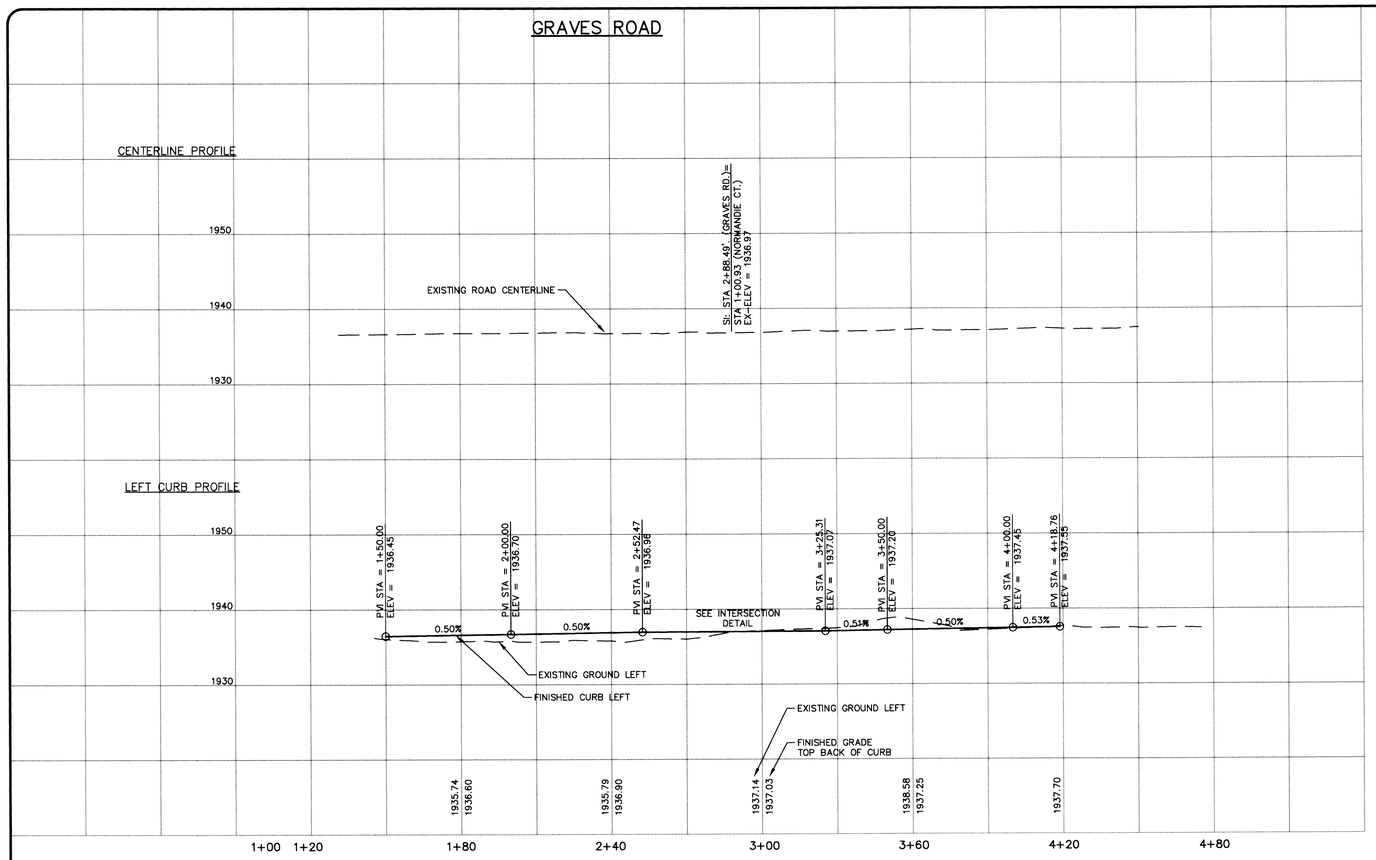

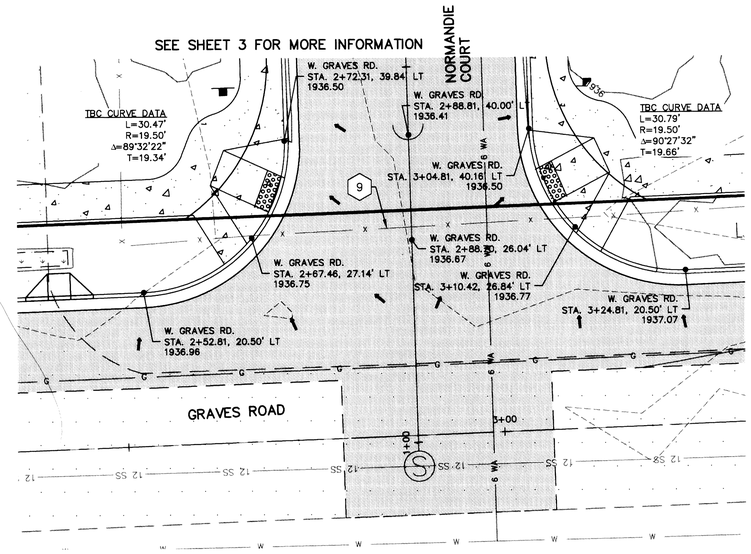

GRAVES RD. & NORMANDIE CT. INTERSECTION DETAIL
SCALE 1"=10'

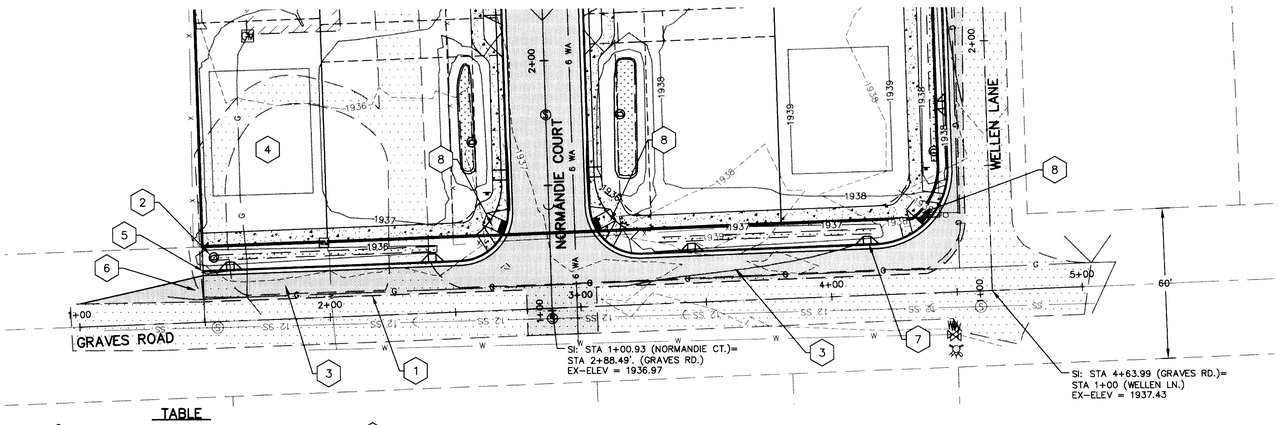

TABLE

1. APPROXIMATE LOCATION OF SAWCUT LINE VARIES. SEE DETAIL SHEET FOR MORE INFORMATION.
2. SPOKANE COUNTY DRYWELL STD. B-1a TYPE "A" W/ TYPE 4 FRAME & GRATE STA.= 1+54.47, 25.55' LT. RIM EL.= 1935.79 POND BOTTOM EL.= 1935.46 AT DRYWELL
3. ASPHALT PAVEMENT. SEE DETAIL SHEET FOR MORE INFORMATION.
4. CONTRACTOR TO REMOVE VARIOUS FEATURES AS NECESSARY FOR SITE IMPROVEMENTS. COORDINATE WITH OWNER.
5. CURB NOSE DOWN. SEE DETAIL SHEET FOR MORE INFORMATION.
6. TAPER ASPHALT INTO EXISTING ROAD PAVEMENT. TAPER LENGTH = 50'
7. CURB INLET TYPE 1 PER SPOKANE COUNTY STD. B-8. APRON WIDTH SHALL MATCH INLET WIDTH. TYPICAL AS SHOWN. SEE DETAIL SHEET FOR MORE INFORMATION.
   STA. 1+60.90, 20.50' LT., INLET 1936.00, L=3'
   STA. 2+41.58, 20.50' LT., INLET 1936.41, L=3'
   STA. 3+44.98, 20.50' LT., INLET 1936.67, L=3'
   STA. 4+14.98, 20.50' LT., INLET 1937.03, L=3'
8. MODIFIED SIDEWALK RAMP PER SPOKANE COUNTY STD. A-5.

DATUM
BENCHMARK

BASED ON WSDOT MONUMENTATION
TBM: FOUND IRON PIPE AT NORTHEAST CORNER OF PLAT.
ELEVATION= 1937.93 (NAVD88)

NOTES

1. SEE CONSTRUCTION SPECIFICATIONS SHOWN ON DETAIL SHEET.
2. ALL CURB RETURNS ARE 30' RADIUS AT BACK OF CURB UNLESS OTHERWISE SHOWN.
3. ALL CURB AND OFFSET DATA IS REFERENCED TO TOP BACK OF CURB, UNLESS OTHERWISE NOTED.
4. 2.0' (MIN.) OF COVER SHALL BE MAINTAINED OVER ALL STORM DRAIN PIPES.
5. CURB INLETS SHALL BE CONSTRUCTED 1" LOWER THAN THE FLOW LINE OF THE CURB. ASPHALT AND CURB TO HAVE SMOOTH TAPER INTO CURB INLETS.
6. W.S.D.O.T. TYPE 2 INLETS SHALL BE PLACED SO THAT THE LONGER SIDE OF THE STRUCTURE IS PERPENDICULAR TO THE EDGE OF PAVEMENT.
7. CONTRACTOR SHALL VERIFY UTILITY SERVICE ELEVATIONS AT ALL CROSSINGS PRIOR TO CONSTRUCTION OF ROAD AND DRAINAGE IMPROVEMENTS.
8. IRRIGATION SYSTEM FOR SWALES SHALL BE PROVIDED BY CONTRACTOR/DEVELOPER. IRRIGATION SYSTEM SHALL BE DESIGN/BUILD.
9. LOCATIONS OF EXISTING UTILITIES SHOWN ON THE PLANS ARE APPROXIMATE. THE CONTRACTOR SHALL BE RESPONSIBLE FOR LOCATING ALL UNDERGROUND AND OVERHEAD UTILITIES, EXISTING OVERHEAD POWER, TELEPHONE AND OTHER EXISTING UTILITIES. UTILITIES SHALL BE RELOCATED AS NEEDED PRIOR TO CONSTRUCTION. CONTRACTOR SHALL COORDINATE WITH APPROPRIATE REGULATORY AGENCIES AND UTILITY COMPANIES FOR ALL REQUIREMENTS.

SPOKANE COUNTY ENGINEERS OFFICE
OFFICIAL PUBLIC DOCUMENT ORIGINAL
CONSTRUCTION PLANS
PROJECT #: P-2041
DATE ACCEPTED: 10-10-14
ACCEPTANCE EXPIRES: 10-10-16
PROJECT LANE MILES PUBLIC: .13
PROJECT LANE MILES PRIVATE: 0
CONSTRUCTION DOCUMENTATION AND CERTIFIED RECORD DRAWINGS, "AS-BUILTS" ARE REQUIRED PRIOR TO COUNTY ACCEPTANCE AND ESTABLISHMENT OF THE ROADS AND DRAINAGE FACILITIES FOR MAINTENANCE.
PERMIT REQUIRED! (509) 477-3600
NOTIFY PERMIT ENGINEER 2 BUSINESS DAYS PRIOR TO CONSTRUCTION

DEVELOPER DATE

GRAPHIC SCALE
30 0 15 30 60
(IN FEET)
HORZ: 1 inch = 30 ft.
VERT: 1 inch = 10 ft.

CALL BEFORE YOU DIG 811

No.	DESC. / DATE	BY
5		
4		
3		
2		
1		

storhäug
civil engineering | planning
landscape architecture | surveying
510 east third avenue | spokane, wa | 99202
p 509.242.1000 | f 509.242.1001

SHEET TITLE: GRAVES ROAD PLAN & PROFILE STA. 1+00 TO STA.4+19

PROJECT TITLE: PINEWOOD PARK ESTATES SPOKANE COUNTY, WA

SEAL

DATE	10/09/2014
DRAWN	KRB
CHECKED	AJS
PROJECT NUMBER	13-300
DRAWING NO.	4 OF 7
	STREET

13300-ST (Graves)2.dwg (4) - GRAVES

P-2041 Eng Road + Drainage

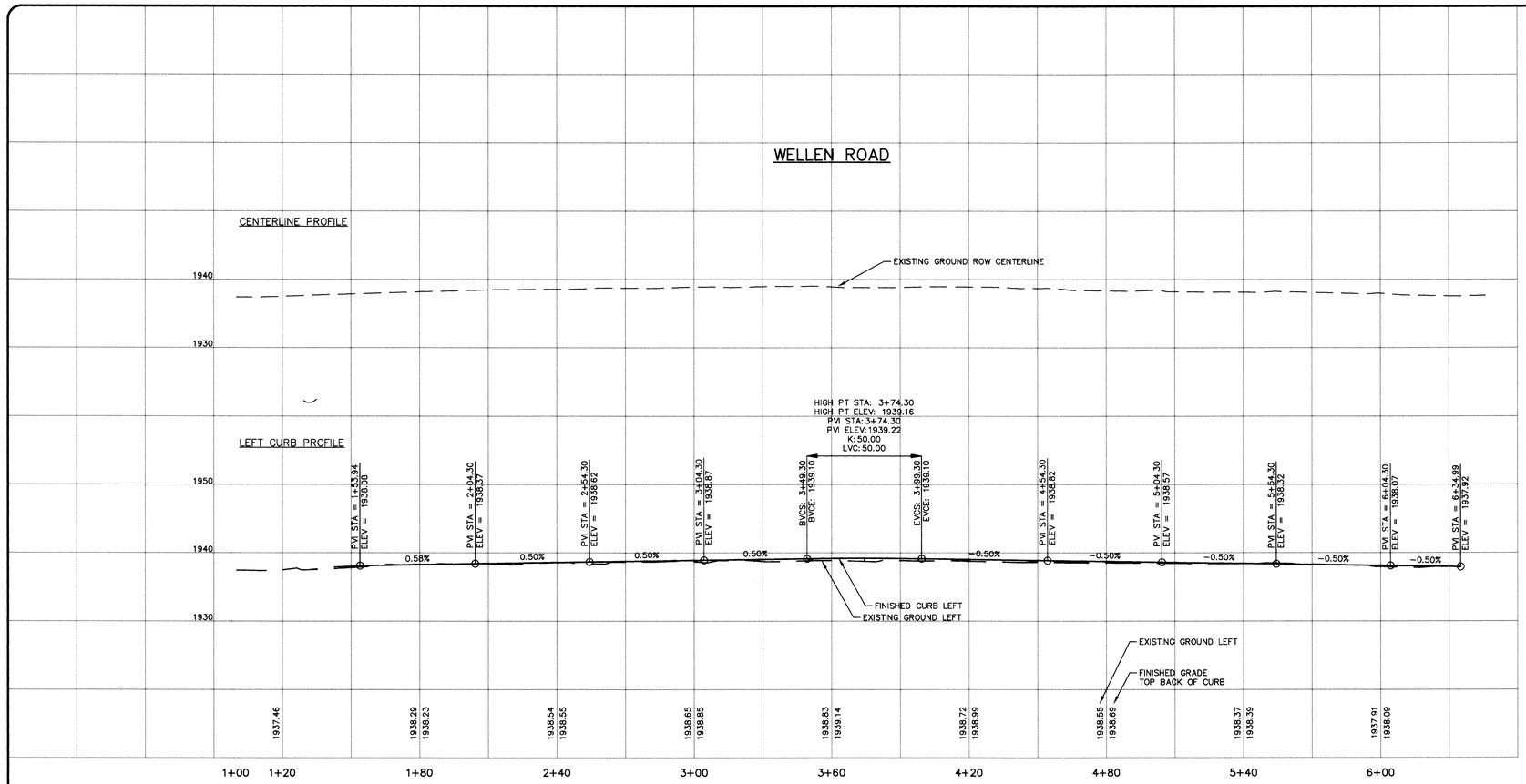

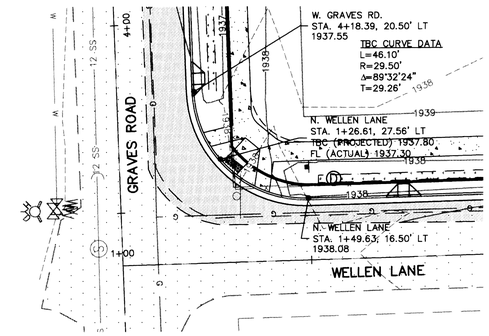

INTERSECTION DETAIL
SCALE 1"=20'

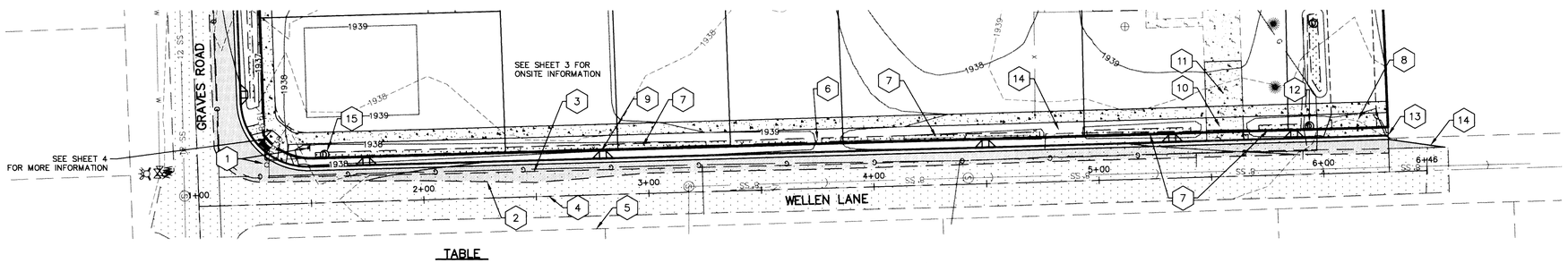

NOTES

1. SEE CONSTRUCTION SPECIFICATIONS SHOWN ON DETAIL SHEET.
2. ALL CURB RETURNS ARE 30' RADIUS AT BACK OF CURB UNLESS OTHERWISE SHOWN.
3. ALL CURB AND OFFSET DATA IS REFERENCED TO TOP BACK OF CURB, UNLESS OTHERWISE NOTED.
4. 2.0' (MIN.) OF COVER SHALL BE MAINTAINED OVER ALL STORM DRAIN PIPES.
5. CURB INLETS SHALL BE CONSTRUCTED 1" LOWER THAN THE FLOW LINE OF THE CURB. ASPHALT AND CURB TO HAVE SMOOTH TAPER INTO CURB INLETS.
6. W.S.D.O.T. TYPE 2 INLETS SHALL BE PLACED SO THAT THE LONGER SIDE OF THE STRUCTURE IS PERPENDICULAR TO THE EDGE OF PAVEMENT.
7. CONTRACTOR SHALL VERIFY UTILITY SERVICE ELEVATIONS AT ALL CROSSINGS PRIOR TO CONSTRUCTION OF ROAD AND DRAINAGE IMPROVEMENTS.
8. IRRIGATION SYSTEM FOR SWALES SHALL BE PROVIDED BY CONTRACTOR/DEVELOPER. IRRIGATION SYSTEM SHALL BE DESIGN/BUILD.
9. LOCATIONS OF EXISTING UTILITIES SHOWN ON THE PLANS ARE APPROXIMATE. THE CONTRACTOR SHALL BE RESPONSIBLE FOR LOCATING ALL UNDERGROUND AND OVERHEAD UTILITIES, EXISTING OVERHEAD POWER, TELEPHONE AND OTHER EXISTING UTILITIES. UTILITIES SHALL BE RELOCATED AS NEEDED PRIOR TO CONSTRUCTION. CONTRACTOR SHALL COORDINATE WITH APPROPRIATE REGULATORY AGENCIES AND UTILITY COMPANIES FOR ALL REQUIREMENTS.

TABLE

1. EXISTING SIGN TO BE REMOVED BY CONTRACTOR AND RELOCATED PER MUTCD SPECIFICATIONS.
2. APPROXIMATE LOCATION OF SAWCUT LINE. SEE DETAIL SHEET FOR MORE INFORMATION.
3. EXISTING EDGE OF PAVEMENT
4. RIGHT OF WAY CENTERLINE
5. RIGHT OF WAY
6. CONTRACTOR TO REMOVE EXISTING FENCE AS NECESSARY FOR SITE IMPROVEMENTS. COORDINATE WITH OWNER.
7. SEE SHEET 7 FOR ROAD SECTION AND SWALE DETAILS.
8. CONCRETE DRIVEWAY WITH INTEGRATED SWALE INLET PER CITY OF SPOKANE STD. F-104B. APPROACH W =20', STA. 6+14.08, 16.50' LT.,
9. CURB INLET TYPE 1 PER SPOKANE COUNTY STD. B-8. APRON WIDTH SHALL MATCH INLET WIDTH. TYPICAL AS SHOWN. SEE DETAIL SHEET FOR MORE INFORMATION.
   STA. 1+74.86, 16.50' LT., INLET 1937.70, L=3'
   STA. 2+80.00, 16.50' LT., INLET 1938.27, L=3'
   STA. 4+50.00, 16.50' LT., INLET 1938.32, L=3'
   STA. 5+33.03, 16.50' LT., INLET 1937.93, L=3'
   STA. 5+87.24, 16.50' LT., INLET 1937.66, L=3'
10. URBAN DRIVEWAY APPROACH PER SPOKANE COUNTY STD. A-4. CL APPROACH W =20', STA. 5+56.65, 16.50' LT.,
11. REMOVE AND REPLACE EXISTING CONCRETE PAVEMENT AS SHOWN ON SHEET 6. CONCRETE SECTION TO MATCH EXISTING.
12. SPOKANE COUNTY DRYWELL STD. B-1a TYPE "A" W/ TYPE 4 FRAME & GRATE STA.= 5+94.15, 21.48 LT. RIM EL.= 1937.43 POND BOTTOM EL.= 1937.10 AT DRYWELL
13. CURB NOSE DOWN. SEE DETAIL SHEET FOR MORE INFORMATION.
14. BREAK IN SWALE. GRADE LANDSCAPING TO SLOPE AT A 3:1 UP TO CURB ELEVATION TO CREATE A 5' FLAT PAD FROM CURB TO SIDEWALK.
15. SPOKANE COUNTY DRYWELL STD. B-1a TYPE "A" W/ TYPE 4 FRAME & GRATE STA.= 1+56.46, 21.48 LT. RIM EL.= 1937.45 POND BOTTOM EL.= 1937.12 AT DRYWELL

SPOKANE COUNTY ENGINEERS OFFICE
OFFICIAL PUBLIC DOCUMENT ORIGINAL
CONSTRUCTION PLANS
PROJECT #: P-2041
DATE ACCEPTED: 11-17-14
ACCEPTANCE EXPIRES: 11-17-16
PROJECT LANE MILES PUBLIC: .13
PROJECT LANE MILES PRIVATE: .07
CONSTRUCTION DOCUMENTATION AND CERTIFIED RECORD DRAWINGS, "AS-BUILTS" ARE REQUIRED PRIOR TO COUNTY ACCEPTANCE AND ESTABLISHMENT OF THE ROADS AND DRAINAGE FACILITIES FOR MAINTENANCE.
PERMIT REQUIRED! (509) 477-3600
NOTIFY PERMIT ENGINEER 2 BUSINESS DAYS PRIOR TO CONSTRUCTION

DEVELOPER DATE

GRAPHIC SCALE
30 0 15 30 60
(IN FEET)
HORZ: 1 inch = 30 ft.
VERT: 1 inch = 10 ft.

CALL BEFORE YOU DIG 811

No.	DESC. / DATE	BY
5		
4		
3		
2		
1		

storhaug
civil engineering | planning
landscape architecture | surveying
510 east third avenue | spokane, wa | 99202
p 509.242.1000 | f 509.242.1001

SHEET TITLE: WELLEN ROAD PLAN & PROFILE STA. 1+00 TO STA. 6+31

PROJECT TITLE: PINEWOOD PARK ESTATES SPOKANE COUNTY, WA

SEAL: JEFFREY A. STORHAUG STATE OF WASHINGTON 29668 REGISTERED PROFESSIONAL ENGINEER

DATE	10/09/2014
DRAWN	KRB
CHECKED	AJS
PROJECT NUMBER	13-300
DRAWING NO.	5 OF 7
	STREET

13300-ST (Graves)2.dwg (5) - WELLEN

P-2041 Eng Road & Drainage

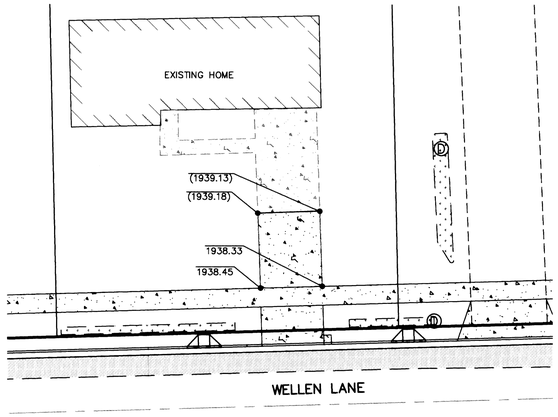

NOTES

1. CONTRACTOR TO REMOVE AND REPLACE EXISTING CONCRETE PAVEMENT. MATCH EXISTING CONCRETE SECTION.
2. CONTRACTOR TO CREATE SMOOTH TRANSITION FROM EXISTING PAVEMENT TO PROPOSED PAVEMENT.
3. SEE NOTE 3 FOR DETAILS CONCERNING APPROACH.

LOT 13 EXISTING DRIVEWAY / SAWCUT

1" = 20'

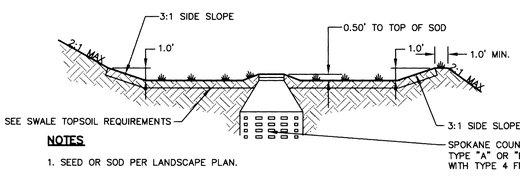

NOTES

1. SEED OR SOD PER LANDSCAPE PLAN.
2. DRYWELL OR INLET SHALL BE RAISED 6" ABOVE THE FLOWLINE OF THE DRAINAGE SWALE UNLESS OTHERWISE SHOWN ON THE PLANS.
3. DRYWELL TO BE CONSTRUCTED PER SPOKANE COUNTY STANDARD B-1a.
4. SWALE SIDE SLOPES TO BE 3:1 MAX (H:V).
5. FOR CONSTRUCTION OF DRYWELLS, INSTALL FILTER FABRIC (AMOCO 4545 OR APPROVED EQUIVALENT).
6. GRADE OF THE SWALE BOTTOM SHALL NOT EXCEED 1.0%.
7. A FULL SCALE DRYWELL TEST TO BE PERFORMED DURING CONSTRUCTION UNDER THE SUPERVISION OF A LICENSED ENGINEER.

TYPICAL SWALE WITH DRYWELL SECTION

NTS

UNLESS RECOMMENDED OTHERWISE BY A GEOTECHNICAL ENGINEER, BIO-INFILTRATION SWALES SHALL BE CONSTRUCTED WITH A TREATMENT ZONE OF MEDIUM-TO WELL-DRAINING SOIL (TESTED FOR INFILTRATIVE AND TREATMENT CRITERIA) AT LEAST 12 INCHES THICK, UNDERLAIN BY A SUBGRADE INFILTRATIVE LAYER AT LEAST 48 INCHES THICK. ALL SOILS, INCLUDING AMMENDED NATIVE SOILS, SHALL MEET THE INFILTRATIVE CRITERIA INDICATED IN TABLE 6-1.

CRITERIA	DESIGN REQUIREMENT
TREATMENT ZONE INFILTRATION RATE (VEGETATED COVER AND TREATEMENT LAYER) [1]	BETWEEN 0.25 AND .050 INCHES/HOUR
SUBGRADE INFILTRATION RATE [2,3]	AT LEAST 0.15 INCHES/HOUR AND FACILITY MUST COMPLETELY DRAIN WITHIN 72 HOURS
AVERAGE CATION EXCHANGE CAPACITY	AT LEAST 15 MILLIEQUIVALENTS/100GRAMS
ORGANIC MATTER CONTENT	AT LEAST 2% BY WEIGHT

[1] SAND AND COARSER SOILS ARE NOT SUITABLE TO BE USED AS TOP SOILS WHEN TREATMENT IS REQUIRED.

[2] AN INFILTRATION TEST (FOR EXAMPLE, A SINGLE-RING INFILTROMETER TEST) DEMONSTRATING THE FACILITY'S CONFORMANCE TO THE INFILTRATION RATE CRITERIA MAY BE REQUIRED PRIOR TO CONSTRUCTION CERTIFICATION.

[3] THE 48-INCH LAYER OF INFILTRATIVE SUBGRADE SOILS MUST BE MEET THE GEOTECHNICAL RECOMMENDATIONS AS PER THE REQUIREMENTS FOUND IN CHAPTER 4 OF THE SPOKANE REGIONAL STORMWATER MANUAL (SRSM).

NOTE:

1. THE SWALE TOPSOIL REQUIREMENTS SHALL MEET THE DESIGN REQUIREMENTS FOR EITHER THE AVERAGE CATION EXCHANGE CAPACITY OR THE ORGANIC MATTER CONTENT.

SWALE TOPSOIL REQUIREMENTS

NTS

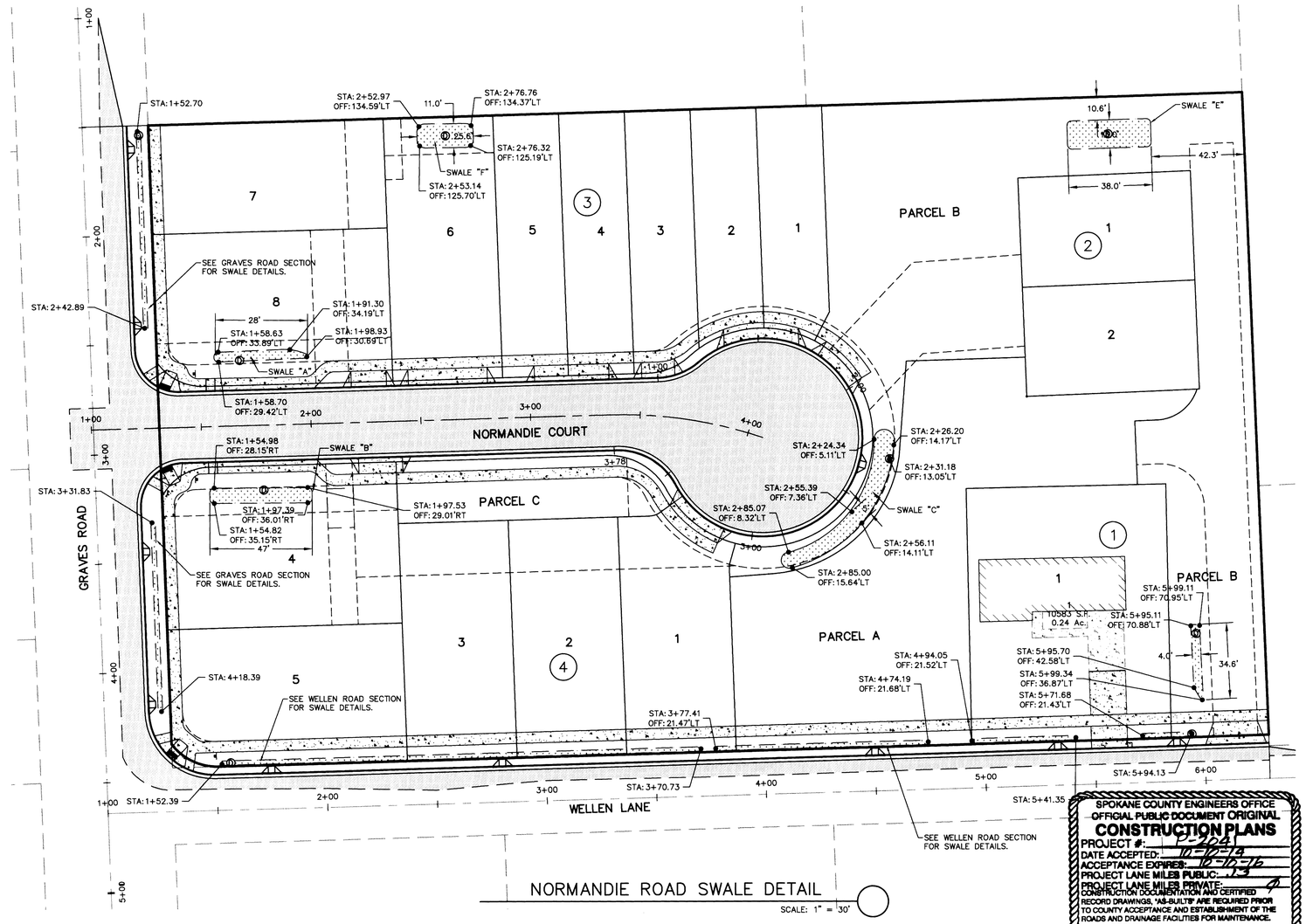

NORMANDIE ROAD SWALE DETAIL

SCALE: 1" = 30'

SPOKANE COUNTY ENGINEERS OFFICE
OFFICIAL PUBLIC DOCUMENT ORIGINAL
CONSTRUCTION PLANS
PROJECT #: P-2041
DATE ACCEPTED: 10-10-14
ACCEPTANCE EXPIRES: 10-10-16
PROJECT LANE MILES PUBLIC: 1.3
PROJECT LANE MILES PRIVATE: 0
CONSTRUCTION DOCUMENTATION AND CERTIFIED RECORD DRAWINGS, "AS-BUILTS" ARE REQUIRED PRIOR TO COUNTY ACCEPTANCE AND ESTABLISHMENT OF THE ROADS AND DRAINAGE FACILITIES FOR MAINTENANCE.
PERMIT REQUIRED! (509) 477-3600
NOTIFY PERMIT ENGINEER 2 BUSINESS DAYS PRIOR TO CONSTRUCTION

GRAPHIC SCALE

30 0 15 30 60

(IN FEET)
1 inch = 30 ft.

DEVELOPER DATE

CALL BEFORE YOU DIG 811

P-2041 Eng Road & Drainage

No.	DESC. / DATE	BY
5		
4		
3		
2		
1		

storhaug
civil engineering | planning
landscape architecture | surveying
510 east third avenue | spokane, wa | 99202
p 509.242.1000 | f 509.242.1001

SHEET TITLE: DETAIL SHEET

PROJECT TITLE: PINEWOOD PARK ESTATES
SPOKANE COUNTY, WA

SEAL

JERRY D. STORHAUG
STATE OF WASHINGTON
REGISTERED PROFESSIONAL ENGINEER

DATE	10/09/2014
DRAWN	KRB
CHECKED	AJS
PROJECT NUMBER	13-300
DRAWING NO.	6 OF 7
	DETAIL

13300-DETAILS-SITE.dwg (6) SWALE DETAIL

1. All work and materials shall be in conformance with the local jurisdiction road standards Spokane County Road Standards, 2010.

2. Prior to site construction, the Contractor is responsible for locating underground utilities. Call the underground utility location service at 811 before you dig.

3. Locations of existing utilities shown in the plans are approximate. The Contractor shall be responsible for locating all underground utilities. Any conflicting utilities shall be relocated prior to construction of street and drainage facilities.

4. The Contractor is required to have a complete set of the accepted street and drainage plans on the job site whenever construction is in progress.

5. If the Contractor discovers any discrepancies between the plans and existing conditions encountered, the contractor shall immediately notify the design engineer.

6. The Contractor should take precautions to protect the infiltration capacity of stormwater facilities (e.g., line the facility with filter fabric, over-excavate upon completion of the infrastructure, etc.)

7. For any curb grades less than 0.8% (0.008 ft/ft), a Professional Land Surveyor currently licensed in the State of Washington shall verify that the curb forms are at the grades noted on the accepted plans, prior to placement of concrete. The Contractor is responsible for arranging and coordinating work with the Surveyor.

8. The Contractor shall employ a Professional Land Surveyor currently licensed in the State of Washington to verify that the cross-gutter forms are at the correct plane grade prior to concrete placement. The cross-gutters shall be constructed prior to paving, and the pavement shall then match the edge of concrete gutter.

9. For construction of drywells, install filter fabric (Amoco 4545 or approved equivalent) between the washed drain rock and the native soils.

10. Bio-infiltration ponds/swales shall have a maximum treatment design depth (from pond/swale bottom to elevation of drywell grate or first overflow/outflow mechanism) of 6 inches. Either organic matter content or Cation Exchange Capacity (CEC) testing shall be completed in order to substantiate the treatment soil composition. The tests shall be performed on composite samples taken from the treatment soil layer from the constructed pond bottom. A composite sample consists of well-mixed soil obtained from at least four cores, to a depth of at least 6 inches, randomly distributed over the pond bottom test area. Stockpile samples from on-site or a material supplier can be tested for informational purposes to determine initial suitability and possible soil amendments, but will not be accepted in-lieu of in-place testing. A minimum of one test shall be performed for each bio-infiltration pond/swale 1,500 square feet or less, with one additional test for each additional 2,000 square feet of pond/swale bottom, or fraction thereof. "One test" is equal to four core samples taken as described above. Testing results shall be submitted as part of the Construction Certification Submittal required for release of surety posted on project.

11. Concrete aprons are required at the inlet into any swale or pond. The finish grade of the swale/pond side slope, where the concrete inlet apron ends, shall be a minimum of 2 inches below the finished elevation of the concrete curb apron extension. The intention is to allow stormwater runoff to enter the swale/pond unobstructed, without backing up into the street and gutter due to sod overgrowth at the inlet.

12. Unlined pond and bioinfiltration swale bottoms are expected to infiltrate via the pond floor, and therefore, shall not be heavily compacted; equipment traffic shall be minimized on the pond bottoms. The facility subgrade shall be a medium- to welldraining material, with a minimum thickness of 48 inches and a minimum infiltration rate of 0.15 in/hr. The facility shall drain within 72 hours of a storm event. If the pond also serves as a water quality treatment facility, the treatment zone (sod and 6 inches of treatment soil) shall be a medium- to well-draining material, with a minimum infiltration rate of 0.25-0.50 in/hr.; silty loam or loamy soils are presumed to have an infiltrative rate that falls within this range. Scarify the finish grade of the pond bottom prior to hydroseeding/sodding. Testing that verifies subgrade minimum infiltration rate is required by the local jurisdiction prior to construction certification to ensure adequate drainage. Infiltrative testing of the treatment zone is only required if soils other than silty loam or loamy soils are proposed.

13. If, during final inspection, it is found that the constructed pond or swale does not conform to the accepted design, the system shall be reconstructed so that it does comply.

STANDARD NOTES FOR STREET AND DRAINAGE

1. Coordinate with Spokane County and Design Engineer prior to construction. The contractor shall obtain all applicable permits prior to beginning construction and coordinate with the governing regulatory agencies regarding construction and inspection requirements.
2. The contractor shall review all geotechnical recommendations and investigation reports associated with the subject development prior to starting construction. Any discrepancies between design plans and geotechnical report shall be reported to the Design Engineer. Construction shall comply with recommendations of the geotechnical reports.
3. The contractor shall demolish and remove existing structures and associated improvements on the subject site prior to starting construction. Contractor shall coordinate demolition activities with owner for further direction and extent of work.
4. Irrigation system for storm water management ponds shall be provided by Contractor/Developer. Irrigation system shall be design/build.
5. Storm drain pipes shall be Polyethylene (CPEP) smooth wall pipe per Advanced Drainage Systems (ADS) N-12, constructed per WSDOT/APWA standard specifications.
6. The contractor shall be responsible for all traffic control in accordance with M.U.T.C.D. and Spokane County Standards prior to disruption of any traffic. No work shall commence until all approved traffic control is in place and the appropriate agency notification has taken place.
7. Where new asphalt joins existing, the existing asphalt shall be cut to a neat vertical edge and tacked with asphalt emulsion type CSS-1 in accordance with the standard specifications. The new asphalt shall be feathered back over existing to provide for a seal at the saw cut location and the joint sealed with grade AR-4000W paving asphalt.
8. Coordinate with the governing regulatory agency regarding construction/installation of street name and regulatory signs.
9. Maintain a minimum of 10 feet horizontal clearance between water pipe and pipe carrying non-potable water. At crossings, there shall be a minimum vertical clearance of 18 inches between water pipe (above) and pipe carrying non-potable water (below). Installations for utilities other than potable water may be installed at a clearance less than those stated above if the non-potable line is sleeved per the governing regulatory agency specifications.
10. Unless elevations and/or contours are otherwise shown, new finish grade surfaces shall be placed to allow for positive drainage to curb, gutter, or other runoff collection devices. Maintain positive drainage away from buildings.
11. Irrigation lines and controls should be kept in the private border easements and out of the public rights-of-way, as much as feasable.

GENERAL NOTES

13300-DETAILS-SITE.dwg (7) DETAILS

NOTES

1. PLACE ACCEPTABLE SOIL MATERIAL IN LAYERS TO REQUIRED SUBGRADE ELEVATIONS.

2. MATERIAL AND COMPACTION REQUIREMENTS SHALL CONFORM WITH WSDOT STANDARDS.

3. IF THE EXISTING SUBGRADE SOIL CONDITIONS INHIBIT PROPER COMPACTION, IT MAY BE NECESSARY TO OVER-EXCAVATE A MINIMUM 12" AND REPLACE WITH APPROVED ONSITE MATERIAL OR IMPORTED MATERIAL.

4. COORDINATE PAVEMENT SECTION WITH REMOVAL OF EXISTING FILL AND REPLACEMENT WITH STRUCTURAL FILL.

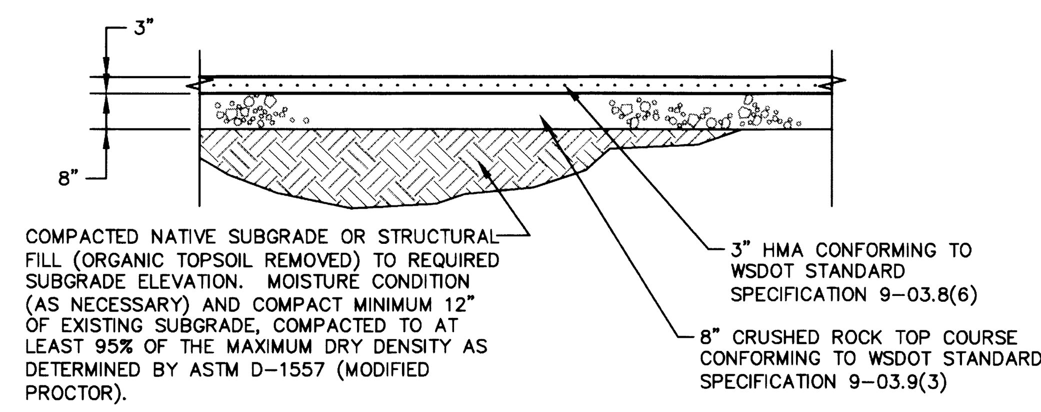

ASPHALT PAVEMENT SECTION

NTS

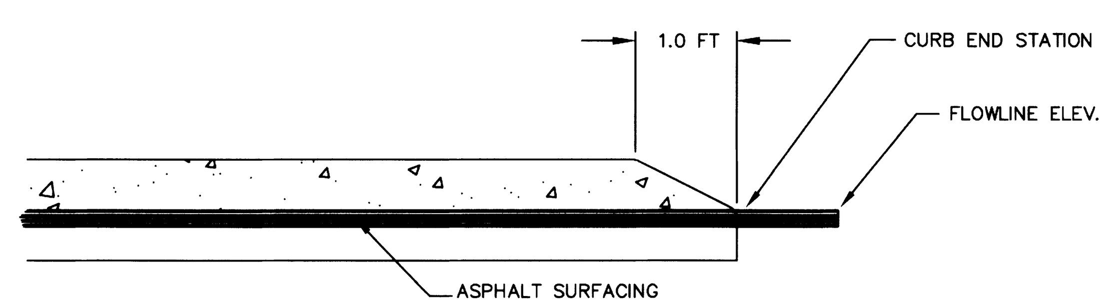

CURB NOSEDOWN

NTS

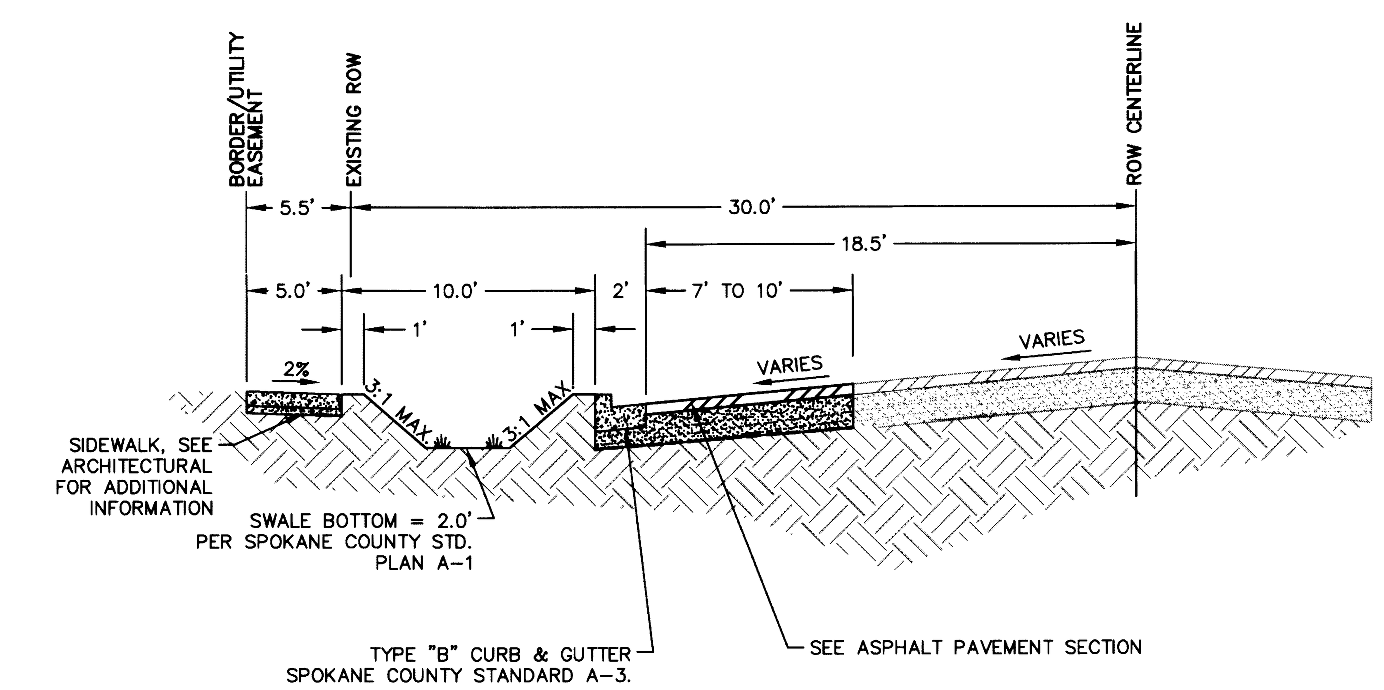

GRAVES ROAD SECTION

NTS

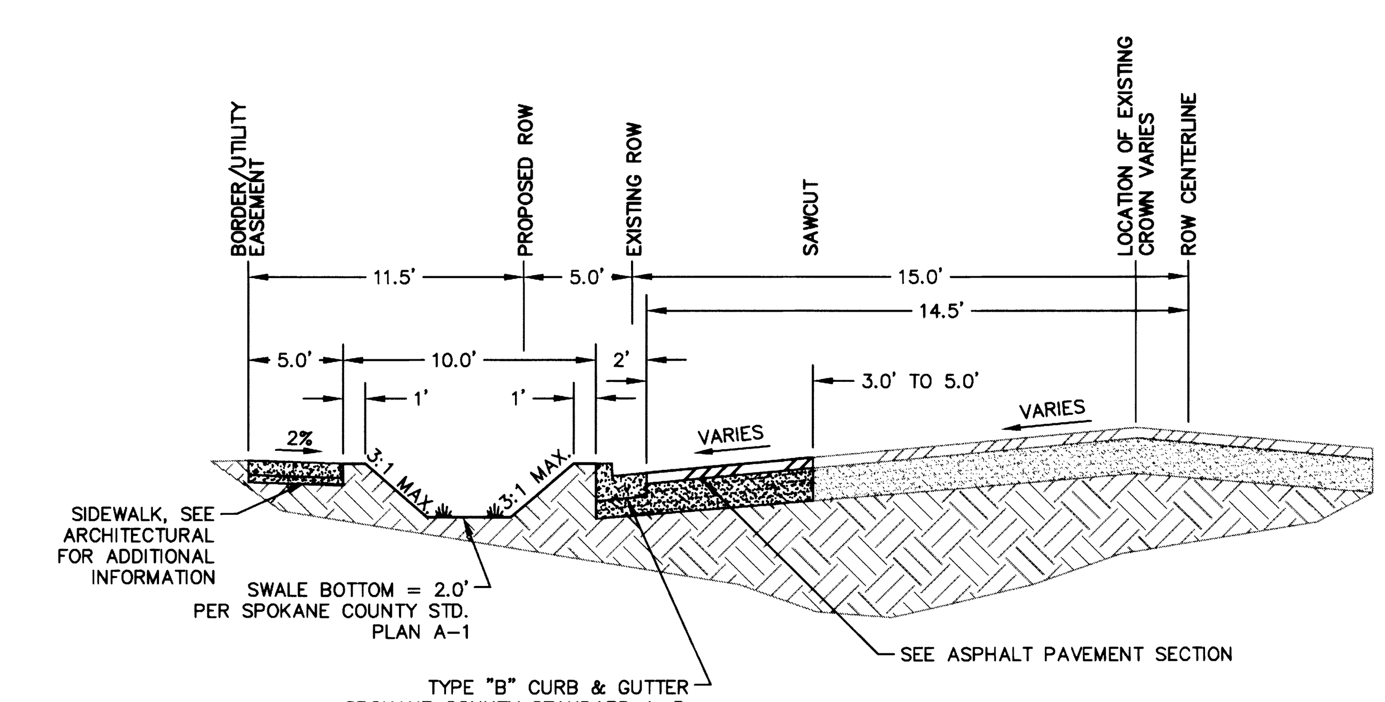

WELLEN LANE SECTION

NTS

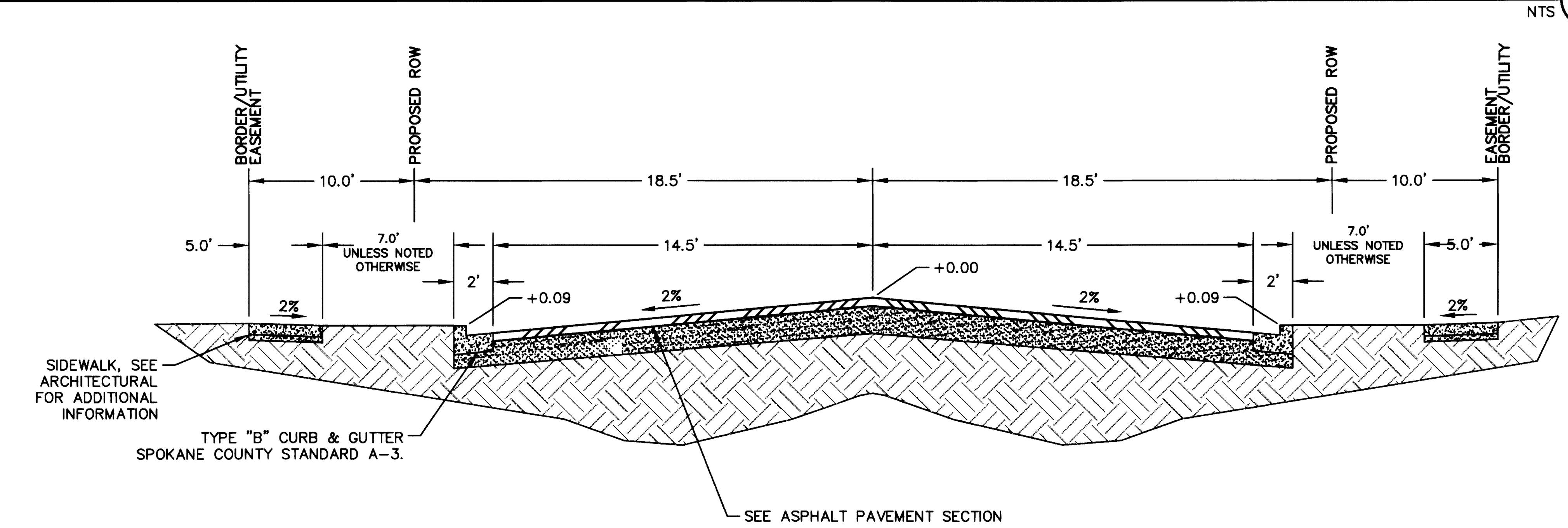

NORMANDIE COURT SECTION

NTS

DEVELOPER DATE

CALL BEFORE YOU DIG 811

SPOKANE COUNTY ENGINEERS OFFICE
OFFICIAL PUBLIC DOCUMENT ORIGINAL
CONSTRUCTION PLANS
PROJECT #: P-2041
DATE ACCEPTED: 10-10-14
ACCEPTANCE EXPIRES: 10-10-16
PROJECT LANE MILES PUBLIC: .13
PROJECT LANE MILES PRIVATE: Ø
CONSTRUCTION DOCUMENTATION AND CERTIFIED RECORD DRAWINGS, "AS-BUILTS" ARE REQUIRED PRIOR TO COUNTY ACCEPTANCE AND ESTABLISHMENT OF THE ROADS AND DRAINAGE FACILITIES FOR MAINTENANCE.
PERMIT REQUIRED! (509) 477-[illegible]
NOTIFY PERMIT EN[illegible]
PRIOR TO [illegible]

No.	DESC. / DATE	BY
5		
4		
3		
2		
1		

storhäug
civil engineering | planning
landscape architecture | surveying
510 east third avenue | spokane, wa | 99202
p 509.242.1000 | f 509.242.1001

SHEET TITLE: DETAIL SHEET

PROJECT TITLE: PINEWOOD PARK ESTATES SPOKANE, WA

SEAL

JERRY D. STORHAUG
STATE OF WASHINGTON
25569
REGISTERED PROFESSIONAL ENGINEER

DATE	10/09/2014
DRAWN	KRB
CHECKED	AJS
PROJECT NUMBER	13-300
DRAWING NO.	7 OF 7
	DETAIL

P-2041 Eng Road & Drainage