NORTHVIEW ESTATES
SPOKANE COUNTY, WASHINGTON

ENGINEER'S CERTIFICATE

THE DESIGN IMPROVEMENTS SHOWN IN THIS SET OF PLANS AND CALCULATIONS CONFORM TO THE APPLICABLE EDITIONS OF THE SPOKANE COUNTY STANDARDS FOR ROAD AND SEWER CONSTRUCTION, AND THE SPOKANE COUNTY GUIDELINES FOR STORM WATER MANAGEMENT. THE SPOKANE COUNTY ENGINEER HAS APPROVED ALL DESIGN DEVIATIONS. I APPROVE THESE PLANS FOR CONSTRUCTION.

EXPIRES: 6/25/08

EXPIRES: 10/23/05

SHEET INDEX

1 TITLE SHEET
2 NORTHVIEW LANE PLAN & PROFILE
3 NORTHVIEW LANE PLAN & PROFILE
4 NORTHVIEW LANE PLAN & PROFILE
5 BRAEDEN LANE AND EDNA LANE PLAN & PROFILE
6 STORM DRAIN PLAN & PROFILE
7 CATCH BASIN PROFILES
8 ROADWAY SECTION & DETAILS
9 MISCELLANEOUS DETAILS

STANDARD CONSTRUCTION NOTES

1. ALL WORK AND MATERIALS SHALL BE IN CONFORMANCE WITH THE "SPOKANE COUNTY STANDARDS FOR ROAD AND SEWER CONSTRUCTION" 2001, AND AS AMENDED.
2. LOCATIONS OF EXISTING UTILITIES SHOWN IN THE PLANS ARE APPROXIMATE. THE CONTRACTOR SHALL BE RESPONSIBLE FOR LOCATING ALL UNDERGROUND UTILITIES. ANY CONFLICTING UTILITIES SHALL BE RELOCATED PRIOR TO CONSTRUCTION OF ROAD AND DRAINAGE FACILITIES.
3. THE CONTRACTOR IS REQUIRED TO HAVE A COMPLETE SET OF THE APPROVED ROAD AND DRAINAGE PLANS. ON THE JOB WHENEVER CONSTRUCTION IS IN PROGRESS.
4. IF THE CONTRACTOR DISCOVERS ANY DISCREPANCIES BETWEEN THE PLANS AND EXISTING CONDITIONS ENCOUNTERED, THE CONTRACTOR SHALL IMMEDIATELY NOTIFY THE DESIGN ENGINEER AND THE SPOKANE COUNTY ENGINEER'S OFFICE.
5. PRIOR TO SITE CONSTRUCTION, THE CONTRACTOR IS RESPONSIBLE FOR LOCATING UNDERGROUND UTILITIES.
6. FOR ANY CURB GRADES LESS THAN 0.8% (0.008 FT/FT), A WASHINGTON STATE-LICENSED PROFESSIONAL LAND SURVEYOR SHALL VERIFY THAT THE CURB FORMS ARE AT THE GRADES NOTED ON THE APPROVED PLANS, PRIOR TO PLACEMENT OF CURB MATERIAL. THE CONTRACTOR IS RESPONSIBLE FOR ARRANGING AND COORDINATING WORK WITH THE PROFESSIONAL LAND SURVEYOR.

STANDARD DRAWINGS / SYMBOL

		SYMBOL
CURBS & GUTTERS, TYPE R	A-3	
STREET NAME SIGNS	A-16	
CATCH BASIN, TYPE 1	B-4	
METAL FRAME & GRATE, TYPE 5	B-16	
MANHOLE, TYPE I-48	U-2	
MANHOLE, TYPE III-48	U-5	
MANHOLE, TYPE III-96	U-6	
CURB INLET, TYPE 1	B-8	

NOTE: STORM SEWER STUBS SHALL BE CONSTRUCTED FOR ALL LOTS EXCEPT FOR LOTS 1 -4 IN BLOCK 3; LOTS 1-5 IN BLOCK 1; AND LOT 10 IN BLOCK 2. STORM SEWER STUBS SHALL BE CONSTRUCTED PER SPOKANE COUNTY STANDARD DRAWING U-15, SERVICE CONNECTION USING ADS N-12 PIPE AND AIR TIGHT FITTINGS.

NOTE: HIGH PRESSURE GAS LINE CONTRACTOR TO NOTIFY NORTHWEST PIPELINE CORP. AT (509)466-6650 3 DAYS PRIOR TO DIGGING IN THE VICINITY OF THE 16" GAS LINE. CONTRACTOR SHALL NOT EXPOSE OR EXCAVATE BENEATH THE 16" GAS LINE WITHOUT A REPRESENTATIVE ON NORTHWEST PIPELINE CORP. PRESENT.

BASIS OF BEARING

THE BASIS OF BEARING (N88°44'00"W) IS THE SOUTH SECTION LINE OF SECTION 13, TOWNSHIP 26 NORTH, RANGE 42 EAST, W.M., SPOKANE COUNTY, WASHINGTON.

BENCHMARK

BRASS CAP IN MONUMENT CASE AT INTERSECTION OF FIVE MILE ROAD AND JOHANSEN ROAD.

ELEVATION = 2388.56 (NAVD 88 DATUM)

RECORD DRAWINGS

These drawings represent the construction work as near as can be determined. These drawings are compiled from information gathered during the construction activity by the contractor(s) and the inspector(s). These drawings are thought to be accurate but no warranty is expressed or implied as to the exactness. These drawings should be used only as a general representation of the constructed work. I have reviewed the construction and to my knowledge find it to be in substantial conformance with approved certified plans and Standard Specifications except as noted.

Engineer: Randy Noble

Date: 1/24/07

SPOKANE COUNTY ENGINEERS OFFICE
OFFICIAL PUBLIC DOCUMENT
ORIGINAL
"AS-BUILTS"
CERTIFIED RECORD DRAWINGS
PROJECT #: P1794
DATE ACCEPTED: 1/23/07

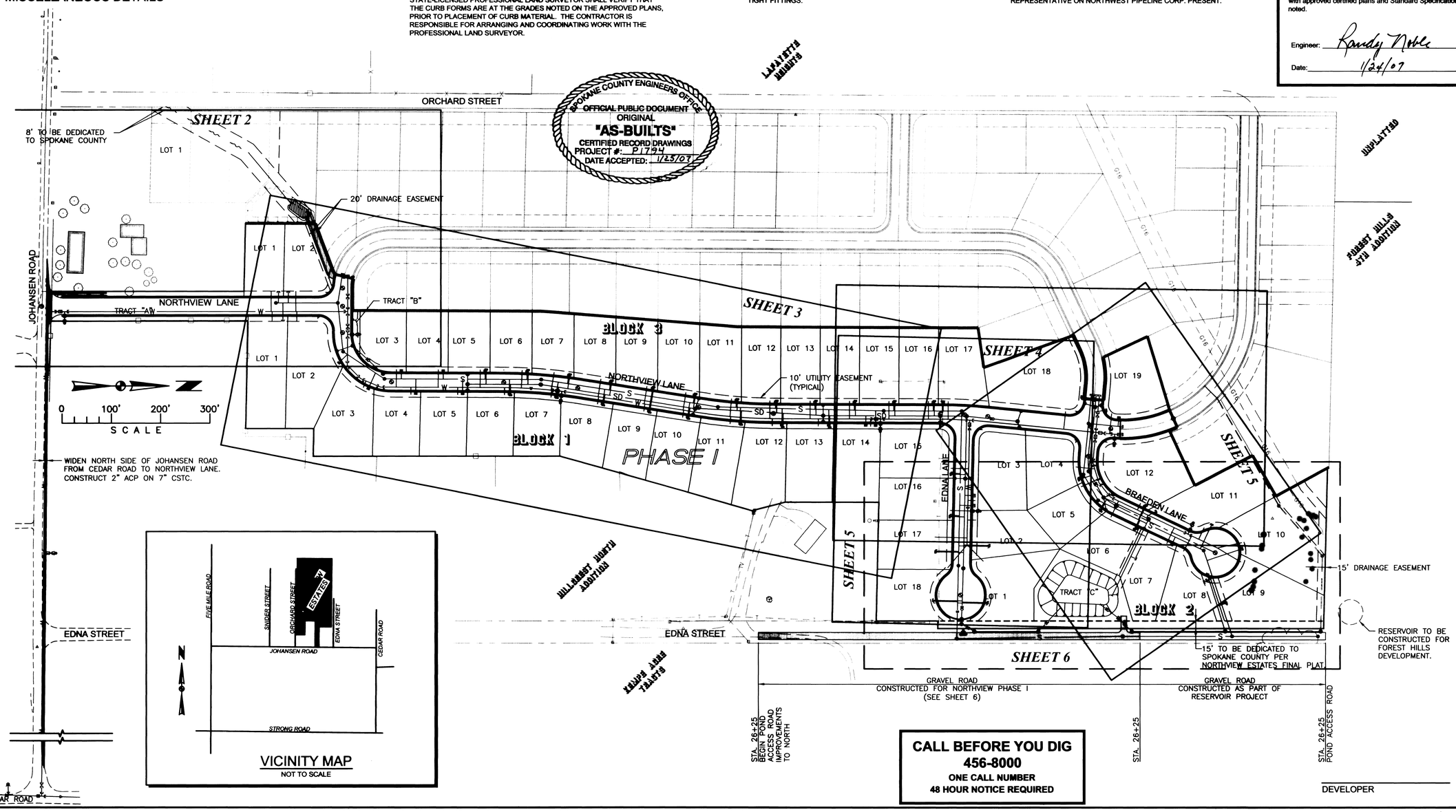

CALL BEFORE YOU DIG
456-8000
ONE CALL NUMBER
48 HOUR NOTICE REQUIRED

DEVELOPER DATE

REVISIONS
DATE DESCR BY
DATE DESCR BY
DATE DESCR BY

THOMAS, DEAN & HOSKINS, INC.
ENGINEERING CONSULTANTS
GREAT FALLS–BOZEMAN–KALISPELL
SPOKANE LEWISTON
MONTANA WASHINGTON IDAHO

DRAWN BY:	EJD
DESIGNED BY:	DAW
QUALITY CHECK:	CWM
DATE:	1/23/07
JOB NO.	S01-062
FIELDBOOK	SDR

NORTHVIEW ESTATES
SPOKANE COUNTY, WASHINGTON

TITLE SHEET

CAD NO:S01-062-SD01.DWG

SHEET 1 OF 9

C:\Documents and Settings\LAN\Desktop\dwg\S01-062-SD01T.dwg, 1/23/2007 3:46:54 PM, TDH SPOKANE, LAN.

P-1794 Eng As-built

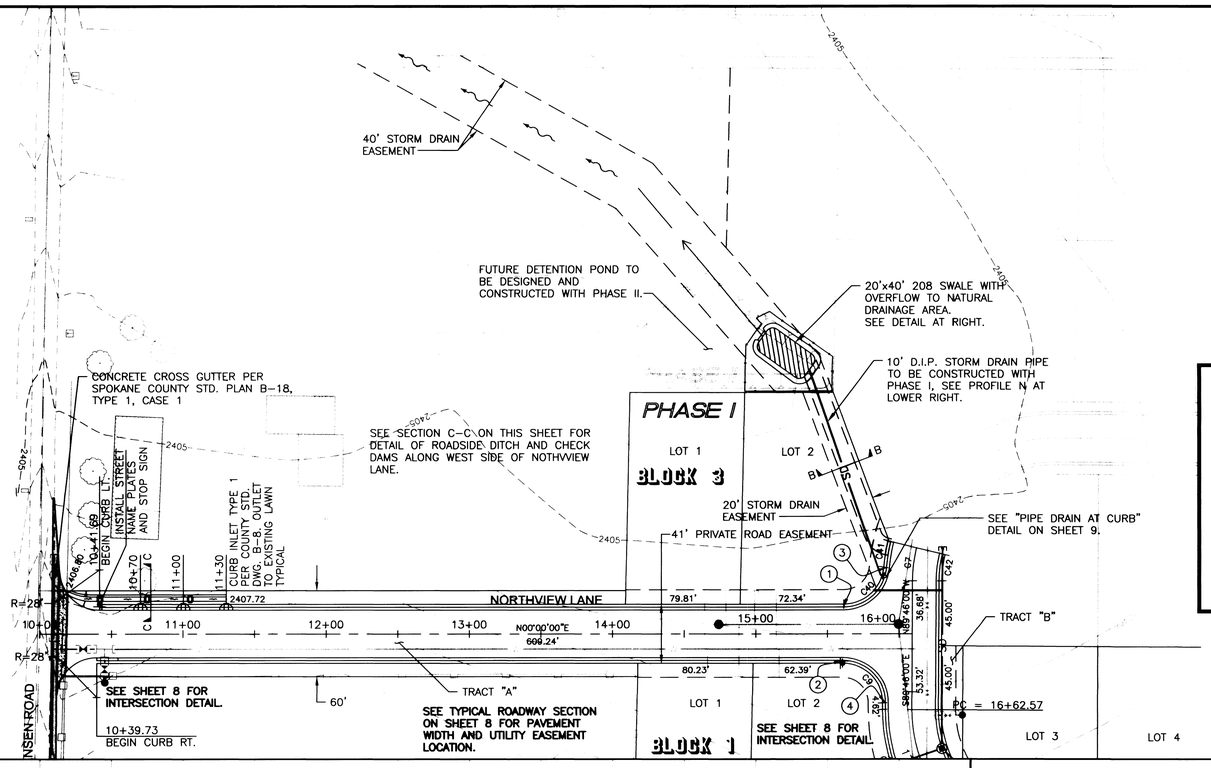

CURVE TABLE				
CURVE	DELTA	RADIUS	LENGTH	TANGENT
C1	90°00'00"	100.00	157.08	100.00
C7	13°21'43"	100.00	23.32	11.71
C9	90°14'00"	28.00	44.10	28.11
C10	34°52'09"	120.50	73.33	37.84
C40	85°16'35"	28.00	41.67	25.78
C41	8°52'19"	120.50	18.66	9.35
C42	13°21'43"	79.50	18.54	9.31
C43	90°00'00"	79.50	124.88	79.50

CURVE DATA IS TO 41' PRIVATE EASEMENT.

BACK OF CURB PC/PT TABLE				
		ALIGN	STATION	OFFSET
1	PC	A	15+61.40	18.50' LT.
2	PC	A	15+60.55	18.50' RT.
3	PT	B	15+64.72	18.50' RT.
4	PT	B	16+59.94'	18.50' RT.

RECORD DRAWINGS

These drawings represent the construction work as near as can be determined. These drawings are compiled from information gathered during the construction activity by the contractor(s) and the inspector(s). These drawings are thought to be accurate but no warranty is expressed or implied as to the exactness. These drawings should be used only as a general representation of the constructed work. I have reviewed the construction and to my knowledge find it to be in substantial conformance with approved certified plans and Standard Specifications except as noted.

Engineer: Randy Noble

Date: 1/24/07

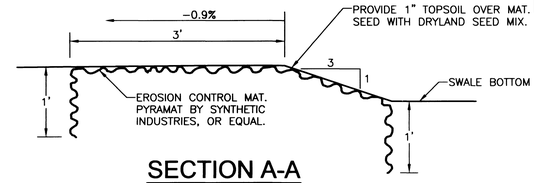

SECTION A-A

OVERFLOW BERM

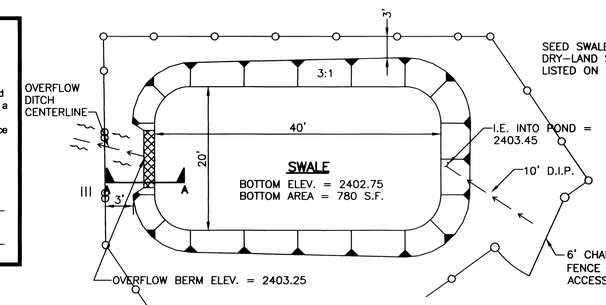

SWALE DETAIL

0 10' 20' 30'
SCALE

0 50' 100' 150'
SCALE

DEVELOPER DATE

EXPIRES: 6/25/08

EXPIRES: 10/23/05

REVISIONS
DESCR DATE BY
DESCR DATE BY
DESCR DATE BY

THOMAS, DEAN & HOSKINS, INC.
ENGINEERING CONSULTANTS
MONTANA WASHINGTON IDAHO
GREAT FALLS–BOZEMAN–KALISPELL SPOKANE LEWISTON

TD&H

DRAWN BY:	EJD
DESIGNED BY:	DAW
QUALITY CHECK:	CWM
DATE:	1/23/07
JOB NO.	S01-062
FIELDBOOK	SDR

NORTHVIEW LANE - LEFT TOP OF CURB PROFILE

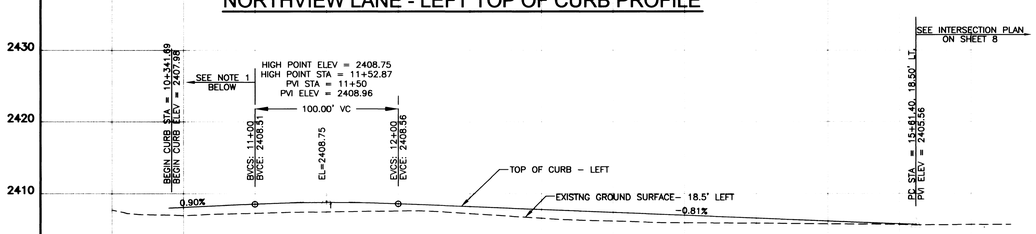

NORTHVIEW LANE - CENTERLINE PROFILE

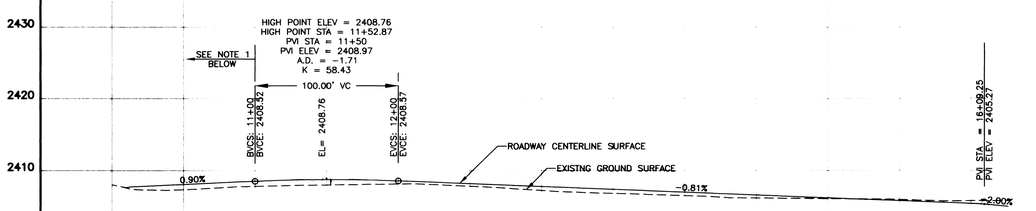

NORTHVIEW LANE - RIGHT TOP OF CURB PROFILE

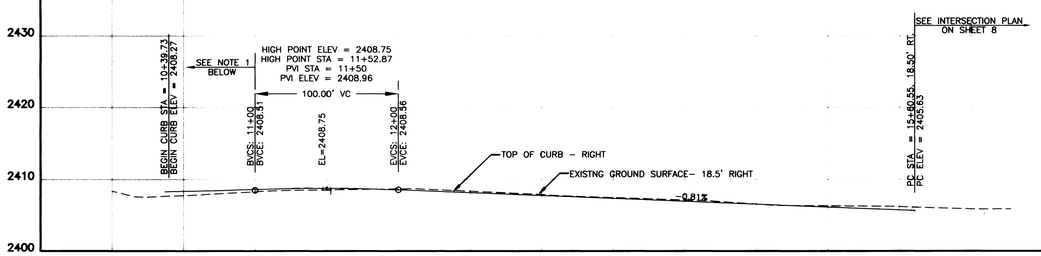

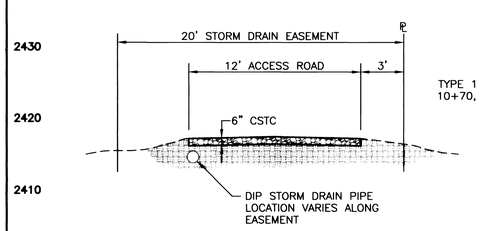

SECTION B-B

0 5' 10' 15'
SCALE

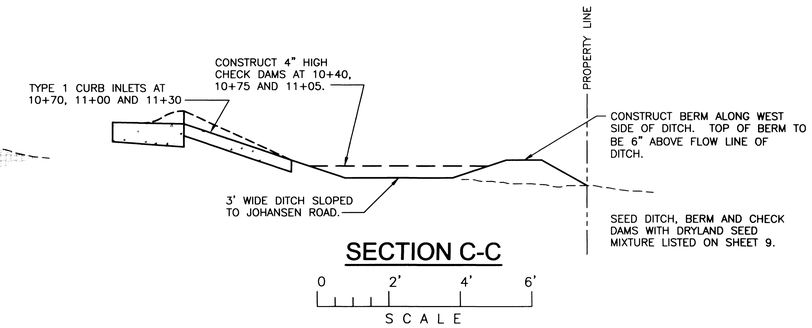

SECTION C-C

0 2' 4' 6'
SCALE

SPOKANE COUNTY ENGINEERS OFFICE
OFFICIAL PUBLIC DOCUMENT
ORIGINAL
"AS-BUILTS"
CERTIFIED RECORD DRAWINGS
PROJECT #: P1794
DATE ACCEPTED: 1/25/07

10'
50'
SCALE

STORM DRAIN PROFILE N

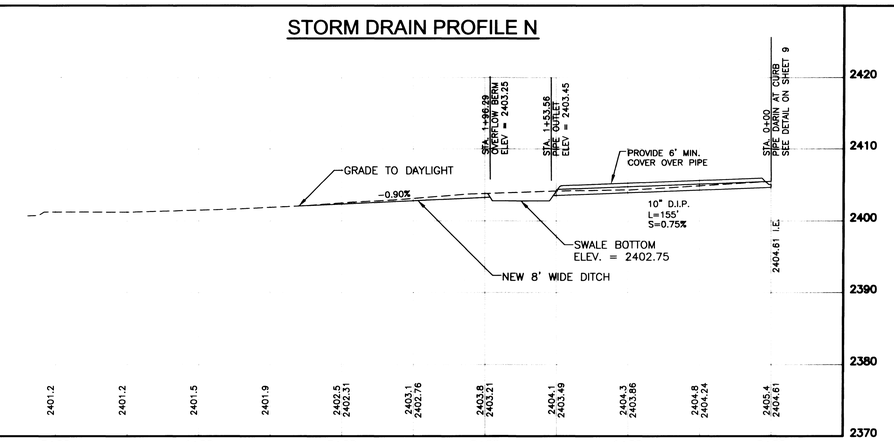

NOTES
1. FOR ELEVATIONS, SEE INTERSECTION PLAN ON SHEET 8.

NORTHVIEW ESTATES
SPOKANE COUNTY, WASHINGTON

PLAN AND PROFILE
NORTHVIEW LANE - STA. 10+00 TO STA. 16+09.24

CAD NO.S01-062-SD02.DWG

SHEET 2 OF 9

P-1794 Eng As Built

C:\Documents and Settings\LAA\Desktop\dwg\S01-062-SD02.dwg, 1/23/2007 3:47:59 PM, TDH SPOKANE, LAA

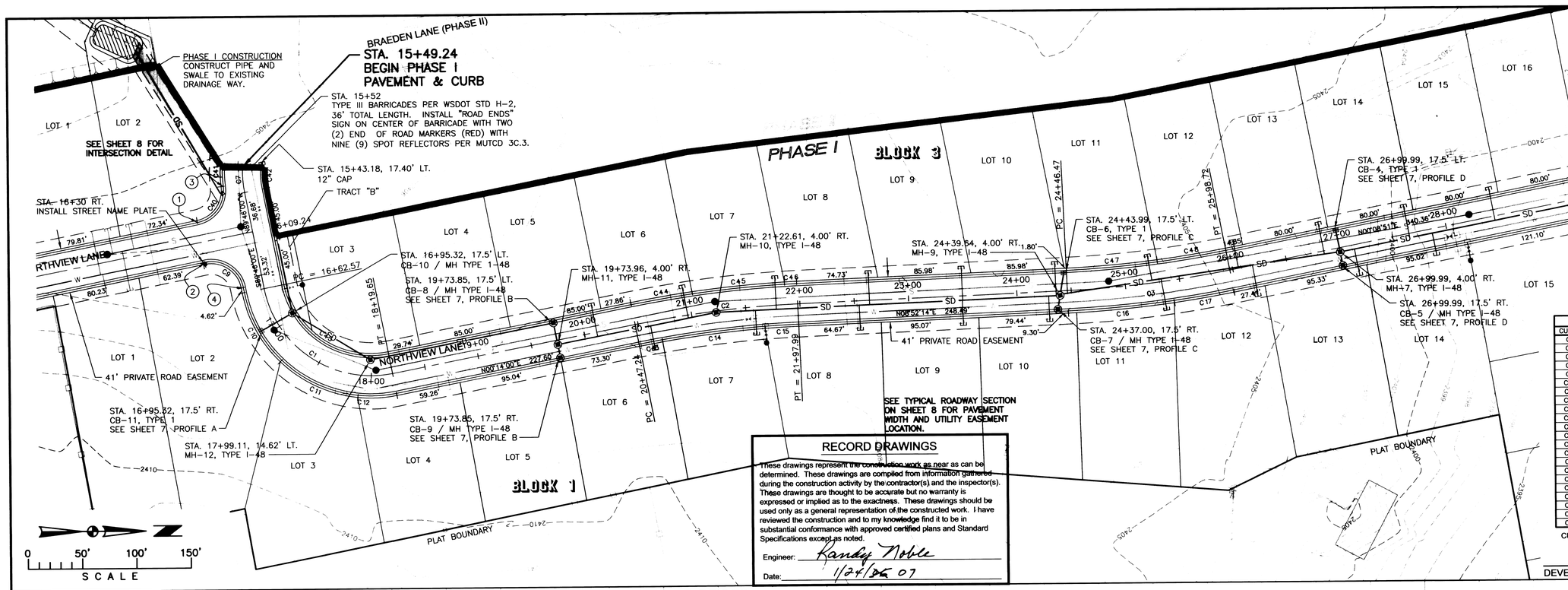

NOTE: OFFSET TO DRAINAGE STRUCTURES IS MEASURED TO THE CENTER OF THE GRATE.

BACK OF CURB PC/PT TABLE				
		ALIGN	STATION	OFFSET
1	PC	A	15+61.40	18.50' LT.
2	PC	A	15+60.55	18.50' RT.
3	PT	B	15+64.72	18.50' RT.
4	PT	B	16+57.94'	18.50' RT.

CURVE TABLE				
CURVE	DELTA	RADIUS	LENGTH	TANGENT
C1	90°00'00"	100.00	157.08	100.00
C2	8°38'14"	1000.00	150.75	75.52
C3	8°34'23"	1000.00	152.10	75.27
C7	13°21'43"	100.00	23.32	11.71
C9	90°14'00"	28.00	44.10	28.11
C10	34°52'09"	120.50	73.33	37.84
C11	37°55'42"	120.50	79.77	41.41
C12	17°12'09"	120.50	36.18	18.23
C13	1°16'11"	979.50	21.71	10.85
C14	5°33'04"	979.50	94.90	47.49
C15	1°48'59"	979.50	31.05	15.53
C16	5°29'18"	1020.50	97.75	48.91
C17	3°14'05"	1020.50	56.61	28.81
C40	85°16'35"	28.00	41.67	27.78
C41	8°52'19"	120.50	18.66	9.35
C42	13°21'43"	79.50	18.54	9.31
C43	90°00'00"	79.50	124.88	79.50
C44	3°12'36"	1020.50	57.17	28.59
C45	4°47'48"	1020.50	85.43	42.74
C46	0°37'51"	1020.50	11.23	5.62
C47	4°53'52"	979.50	83.72	41.89
C48	3°49'30"	979.50	63.39	32.17

CURVE DATA IS 41' PRIVATE EASEMENT.

RECORD DRAWINGS

These drawings represent the construction work as near as can be determined. These drawings are compiled from information gathered during the construction activity by the contractor(s) and the inspector(s). These drawings are thought to be accurate but no warranty is expressed or implied as to the exactness. These drawings should be used only as a general representation of the constructed work. I have reviewed the construction and to my knowledge find it to be in substantial conformance with approved certified plans and Standard Specifications except as noted.

Engineer: Randy Noble

Date: 1/24/~~06~~ 07

DEVELOPER DATE

EXPIRES: 6/25/08

EXPIRES: 10/23/05

REVISIONS
DESCR DATE BY
DESCR DATE BY
DESCR DATE BY

THOMAS, DEAN & HOSKINS, INC.
ENGINEERING CONSULTANTS
GREAT FALLS–BOZEMAN–KALISPELL–LEWISTON
MONTANA WASHINGTON IDAHO

TD&H

DRAWN BY:	EJD
DESIGNED BY:	DAW
QUALITY CHECK:	CWM
DATE:	1/23/07
JOB NO.	S01-062
FIELDBOOK	SDR

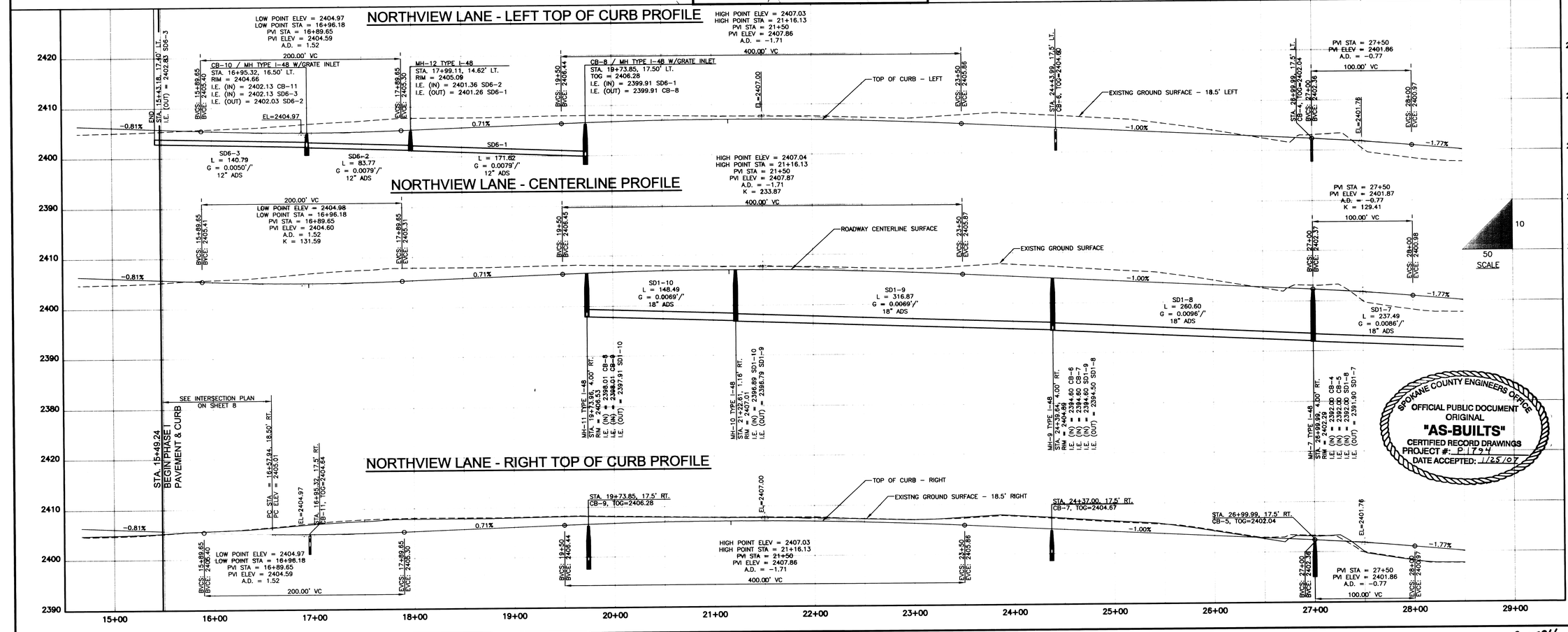

SPOKANE COUNTY ENGINEERS OFFICE
OFFICIAL PUBLIC DOCUMENT
ORIGINAL
"AS-BUILTS"
CERTIFIED RECORD DRAWINGS
PROJECT #: P1794
DATE ACCEPTED: 1/25/07

NORTHVIEW ESTATES
SPOKANE COUNTY, WASHINGTON

PLAN AND PROFILE

NORTHVIEW LANE - STA. 15+50 TO STA. 28+50

CAD NO501-062-SD03 .DWG

SHEET 3 OF 9

P-1794 Eng As Built

C:\Documents and Settings\LAA\Desktop\dwg\S01-062-SD03.dwg, 1/23/2007 3:47:14 PM, TDH SPOKANE, LAA

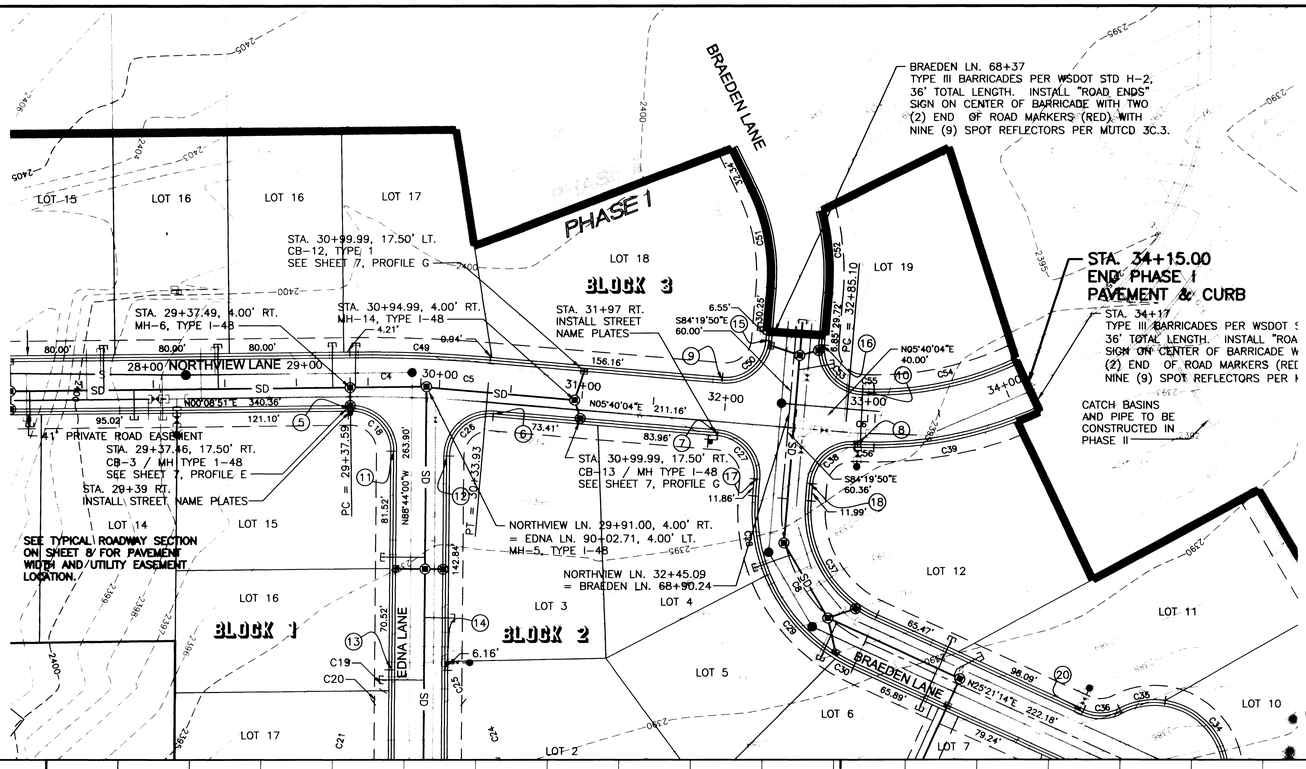

CURVE TABLE				
CURVE	DELTA	RADIUS	LENGTH	TANGENT
C4	2°49'34"	1000.00	49.33	24.67
C5	2°41'38"	1000.00	47.02	23.51
C6	4°35'04"	250.00	20.00	10.01
C18	91°07'09"	28.00	44.53	28.55
C19	31°21'13"	28.00	15.32	7.86
C20	21°19'40"	28.00	10.42	5.27
C21	79°41'25"	52.00	64.29	37.45
C24	66°11'28"	52.00	72.32	43.39
C25	52°40'52"	28.00	25.74	13.86
C26	94°24'04"	28.00	46.13	32.24
C27	90°00'06"	28.00	43.98	28.00
C28	27°03'22"	120.50	56.90	28.99
C29	36°36'35"	120.50	76.99	39.86
C30	6°38'59"	120.50	13.99	7.00
C34	84°22'25"	52.00	76.58	47.13
C35	36°30'00"	52.00	33.13	25.74
C36	52°40'52"	28.00	25.74	13.86
C37	70°18'56"	79.50	97.57	55.99
C38	88°22'02"	28.00	45.18	27.21
C39	21°44'38"	270.50	102.66	51.95
C49	5°31'12"	1020.50	98.32	49.20
C50	89°59'54"	28.00	47.98	28.00
C51	30°55'46"	129.50	69.91	35.83
C52	19°28'42"	170.50	57.96	29.26
C53	92°25'09"	28.00	45.16	29.21
C54	25°27'23"	229.50	100.98	51.84
C55	1°59'39"	229.50	7.99	3.99
C56	2°46'50"	270.50	13.13	6.56

CURVE DATA IS TO 41' PRIVATE EASEMENT.

NOTE: OFFSET TO DRAINAGE STRUCTURES IS MEASURED TO THE CENTER OF THE GRATE.

BACK OF CURB PC/PT TABLE				
		ALIGN	STATION	OFFSET
5	PC	B	29+37.46	18.50' RT.
6	PT	B	30+39.22	18.50' RT.
7	PT	B	31+96.59	18.50' RT.
8	PT	B	32+92.21	18.50' RT.
9	PC	B	31+96.59	18.50' LT.
10	PT	B	32+95.64	18.50' LT.
11	PT	D	90+48.24	18.50' LT.
12	PC	D	90+51.27	18.50' LT.
13	PC	D	92+00.28	18.50' RT.
14	PC	D	92+00.29	18.50' RT.
15	PT	C	68+41.74	18.50' RT.
16	PC	C	68+41.56	18.50' LT.
17	PT	C	69+38.74	18.50' RT.
18	PC	C	69+38.62	18.50' LT.
20	PC	C	72+31.88	18.50' LT.

EXPIRES: 6/25/08

EXPIRES: 10/23/05

RECORD DRAWINGS

These drawings represent the construction work as near as can be determined. These drawings are compiled from information gathered during the construction activity by the contractor(s) and the inspector(s). These drawings are thought to be accurate but no warranty is expressed or implied as to the exactness. These drawings should be used only as a general representation of the constructed work. I have reviewed the construction and to my knowledge find it to be in substantial conformance with approved certified plans and Standard Specifications except as noted.

Engineer: Randy Noble

Date: 1/24/07

SPOKANE COUNTY ENGINEERS OFFICE
OFFICIAL PUBLIC DOCUMENT
ORIGINAL
"AS-BUILTS"
CERTIFIED RECORD DRAWINGS
PROJECT #: P1794
DATE ACCEPTED: 1/25/07

DEVELOPER DATE

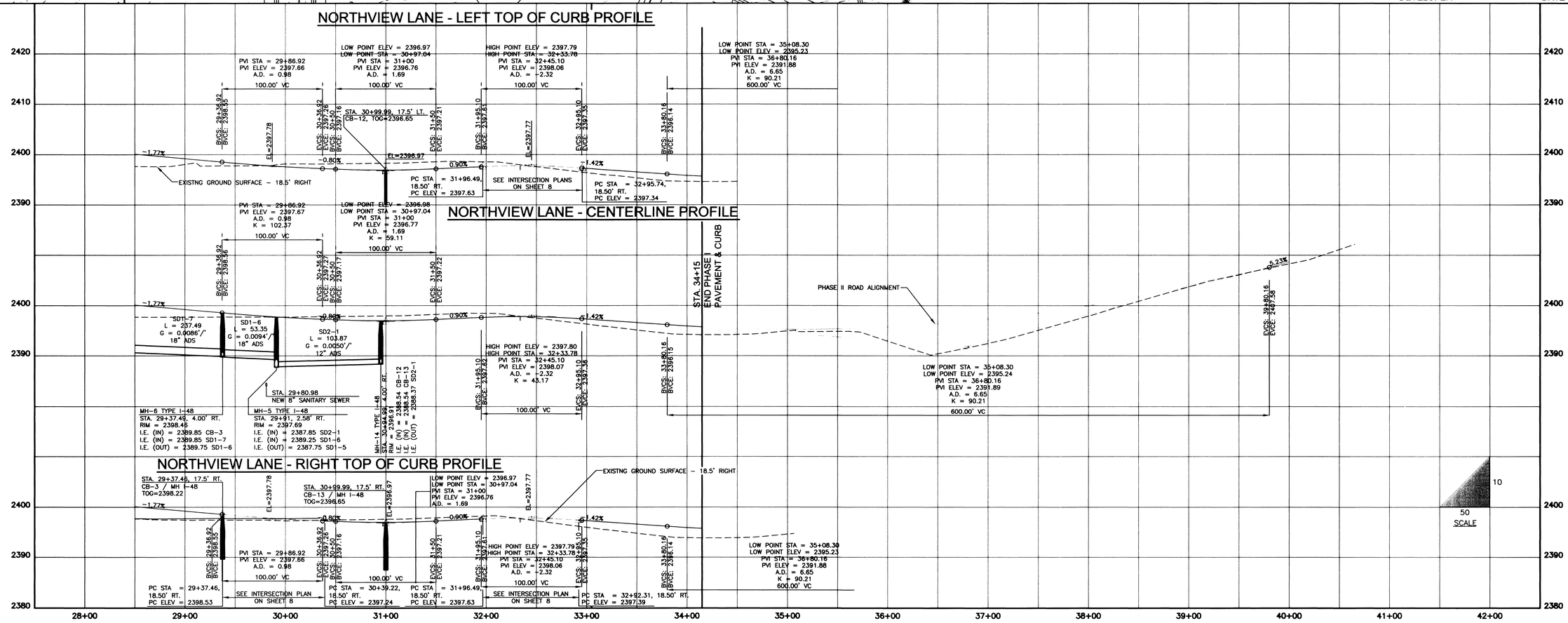

REVISIONS
DESCR DATE BY
DESCR DATE BY
DESCR DATE BY
DESCR DATE BY

THOMAS, DEAN & HOSKINS, INC.
ENGINEERING CONSULTANTS
GREAT FALLS–BOZEMAN–KALISPELL
LEWISTON
MONTANA
WASHINGTON
IDAHO

TD&H

DRAWN BY:	EJD
DESIGNED BY:	DAW
QUALITY CHECK:	CWM
DATE:	1/23/07
JOB NO.	S01-062
FIELDBOOK	SDR

NORTHVIEW ESTATES
SPOKANE COUNTY, WASHINGTON

PLAN AND PROFILE
NORTHVIEW LANE - STA. 28+50 TO STA. 34+00

CAD NO.S01-062-SD04 .DWG

SHEET 4 OF 9

C:\Documents and Settings\LAA\Desktop\dwg\S01-062-SD04.dwg, 1/23/2007 3:46:35 PM, TDH SPOKANE, LAA

P-1794 Eng Acceptance

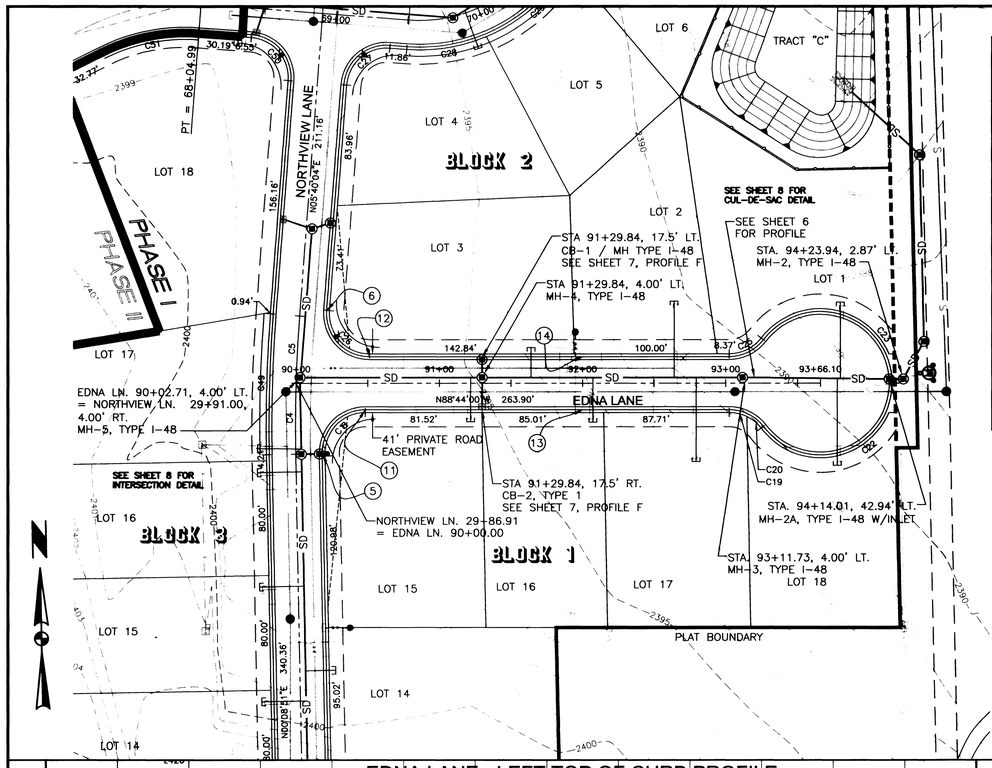

CURVE TABLE				
CURVE	DELTA	RADIUS	LENGTH	TANGENT
C4	2°49'34"	1000.00	49.33	24.67
C5	2°41'38"	1000.00	47.02	23.51
C6	4°35'04"	250.00	20.00	10.01
C8	70°18'56"	100.00	122.72	70.43
C18	91°07'09"	28.00	44.53	28.55
C19	28°09'28"	28.00	12.78	6.50
C20	26°31'26"	28.00	12.96	6.60
C22	142°40'52"	52.00	129.49	153.99
C23	142°40'52"	52.00	129.49	153.99
C25	52°40'52"	28.00	25.74	13.86
C26	94°24'04"	28.00	46.13	30.24
C27	90°00'06"	28.00	43.98	28.00
C28	27°03'22"	120.50	56.90	28.99
C29	36°36'35"	120.50	76.99	39.86
C30	6°38'59"	120.50	13.99	7.00
C31	52°40'52"	28.00	25.74	13.86
C32	66°42'39"	52.00	60.54	34.23
C33	97°46'41"	52.00	88.74	59.59
C34	84°22'25"	52.00	76.58	47.13
C35	36°30'00"	52.00	33.13	17.15
C36	52°40'52"	28.00	25.74	13.86
C37	70°18'56"	79.50	97.57	55.99
C38	88°22'02"	28.00	43.18	27.21
C39	21°44'38"	270.50	102.66	51.95
C49	5°31'12"	1020.50	98.32	49.20
C50	89°59'54"	28.00	43.98	28.00
C51	30°55'46"	129.50	69.91	35.83
C52	19°28'42"	170.50	57.96	29.26
C53	94°25'09"	28.00	45.16	29.21
C54	25°27'32"	229.50	101.98	51.84
C55	1°59'39"	229.50	7.99	3.99
C56	2°46'50"	270.50	13.13	6.56

CURVE DATA IS TO 41' PRIVATE EASEMENT.

SEE SHEET 8 FOR INTERSECTION AND CUL-DE-SAC DETAILS.

NOTE: OFFSET TO DRAINAGE STRUCTURES IS MEASURED TO THE CENTER OF THE GRATE.

DEVELOPER DATE

0 50' 100' 150'
SCALE

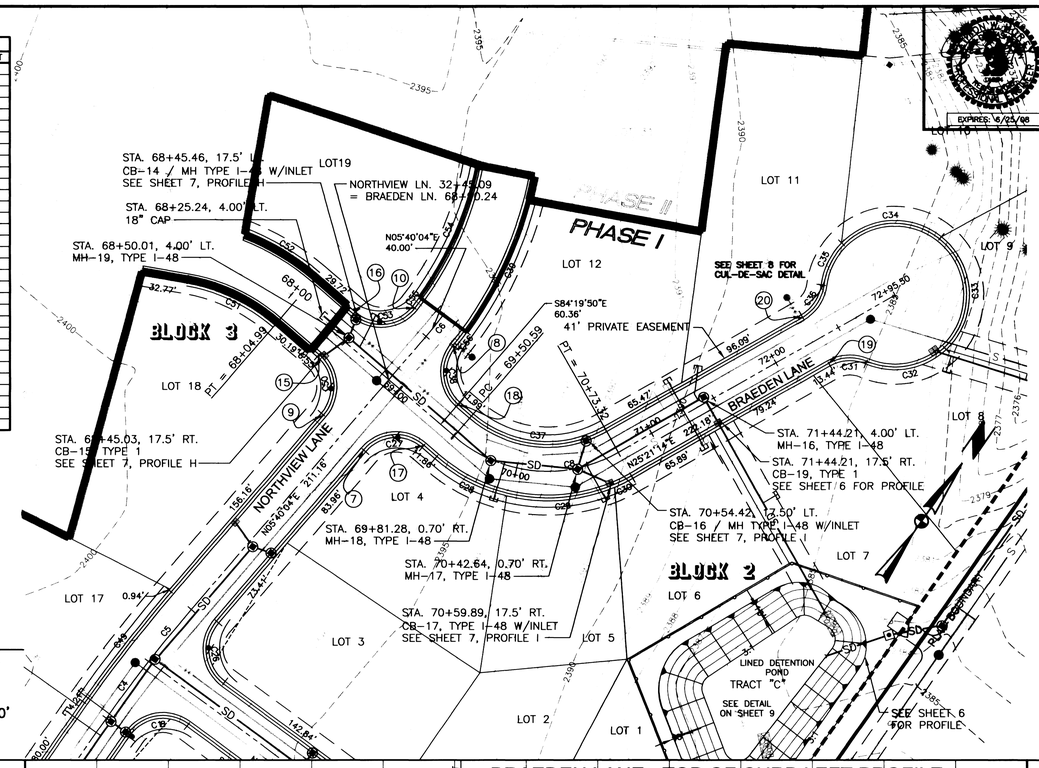

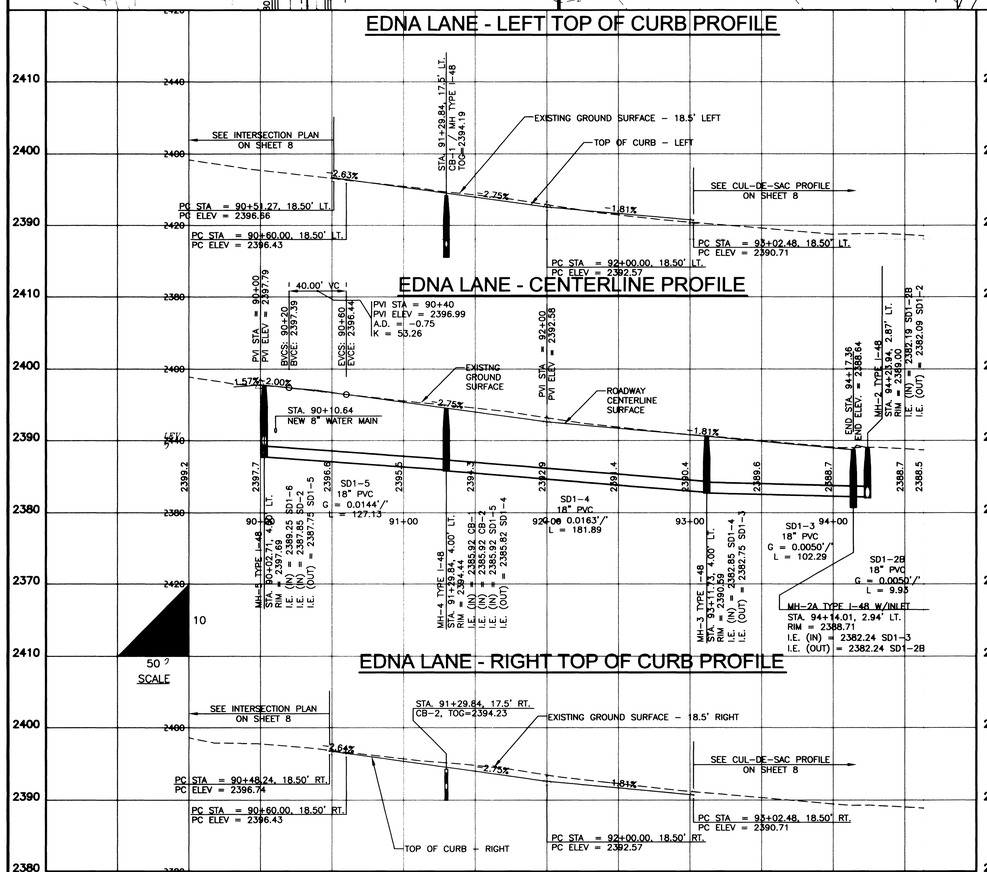

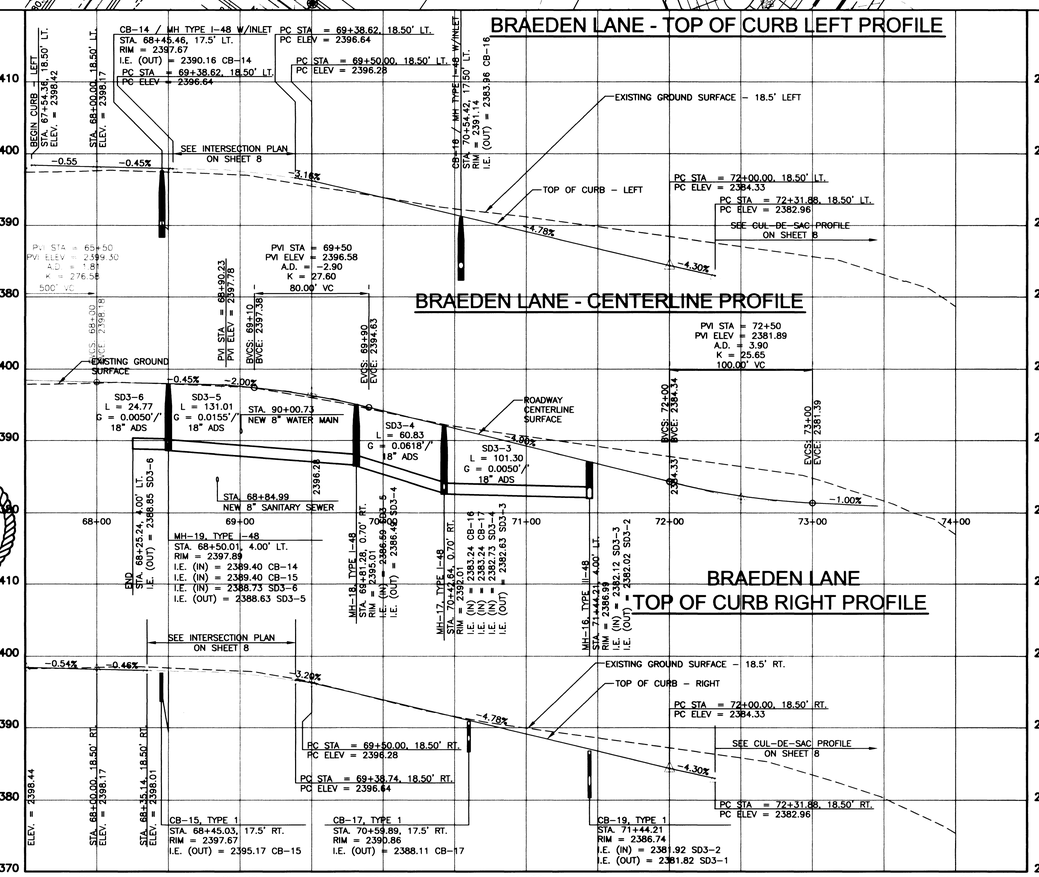

BACK OF CURB PC/PT TABLE				
		ALIGN	STATION	OFFSET
5	PC	B	29+37.46	18.50' RT.
6	PT	B	30+39.22	18.50' RT.
7	PT	B	31+96.59	18.50' RT.
8	PT	B	32+92.21	18.50' RT.
9	PC	B	31+96.59	18.50' LT.
10	PT	B	32+95.64	18.50' LT.
11	PT	D	90+48.24	18.50' RT.
12	PC	D	90+51.27	18.50' LT.
13	PC	D	92+00.28	18.50' RT.
14	PC	D	92+00.29	18.50' LT.
15	PT	C	68+41.74	18.50' RT.
16	PC	C	68+41.56	18.50' LT.
17	PT	C	69+38.74	18.50' RT.
18	PC	C	69+38.62	18.50' LT.
19	PC	C	72+31.88	18.50' RT.
20	PC	C	72+31.88	18.50' LT.

SPOKANE COUNTY ENGINEERS OFFICE
OFFICIAL PUBLIC DOCUMENT
ORIGINAL
"AS-BUILTS"
CERTIFIED RECORD DRAWINGS
PROJECT #: P1794
DATE ACCEPTED: 1/25/07

RECORD DRAWINGS

These drawings represent the construction work as near as can be determined. These drawings are compiled from information gathered during the construction activity by the contractor(s) and the inspector(s). These drawings are thought to be accurate but no warranty is expressed or implied as to the exactness. These drawings should be used only as a general representation of the constructed work. I have reviewed the construction and to my knowledge find it to be in substantial conformance with approved certified plans and Standard Specifications except as noted.

Engineer: Randy Noble
Date: 1/24/07

EXPIRES: 6/25/08
EXPIRES: 10/23/05

REVISIONS
BY DATE DESCR
BY DATE DESCR
BY DATE DESCR

THOMAS, DEAN & HOSKINS, INC.
ENGINEERING CONSULTANTS
GREAT FALLS–BOZEMAN–KALISPELL–LEWISTON
MONTANA WASHINGTON IDAHO

TD&H

DRAWN BY:	EJD
DESIGNED BY:	DAW
QUALITY CHECK:	CWM
DATE:	1/23/07
JOB NO.	S01-062
FIELDBOOK	SDR

NORTHVIEW ESTATES
SPOKANE COUNTY, WASHINGTON

PLAN AND PROFILE
EDNA LANE AND BRAEDEN LANE

CAD NO.S01-062-SD05.DWG
SHEET 5 OF 9

P-1794 Eng As Built

C:\Documents and Settings\LAA\Desktop\dwg\S01-062-SD05T.dwg, 1/23/2007 4:00:17 PM, TDH SPOKANE, LAA

ACCESS ROAD & SWALE (A)

NOT TO SCALE

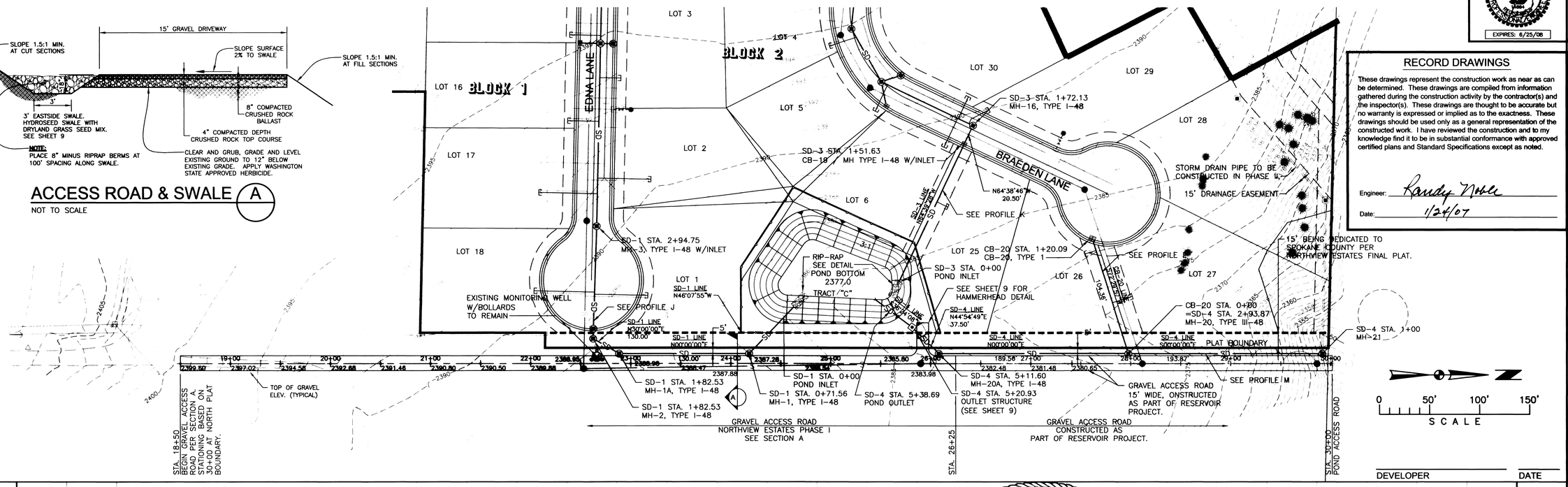

DEVELOPER DATE

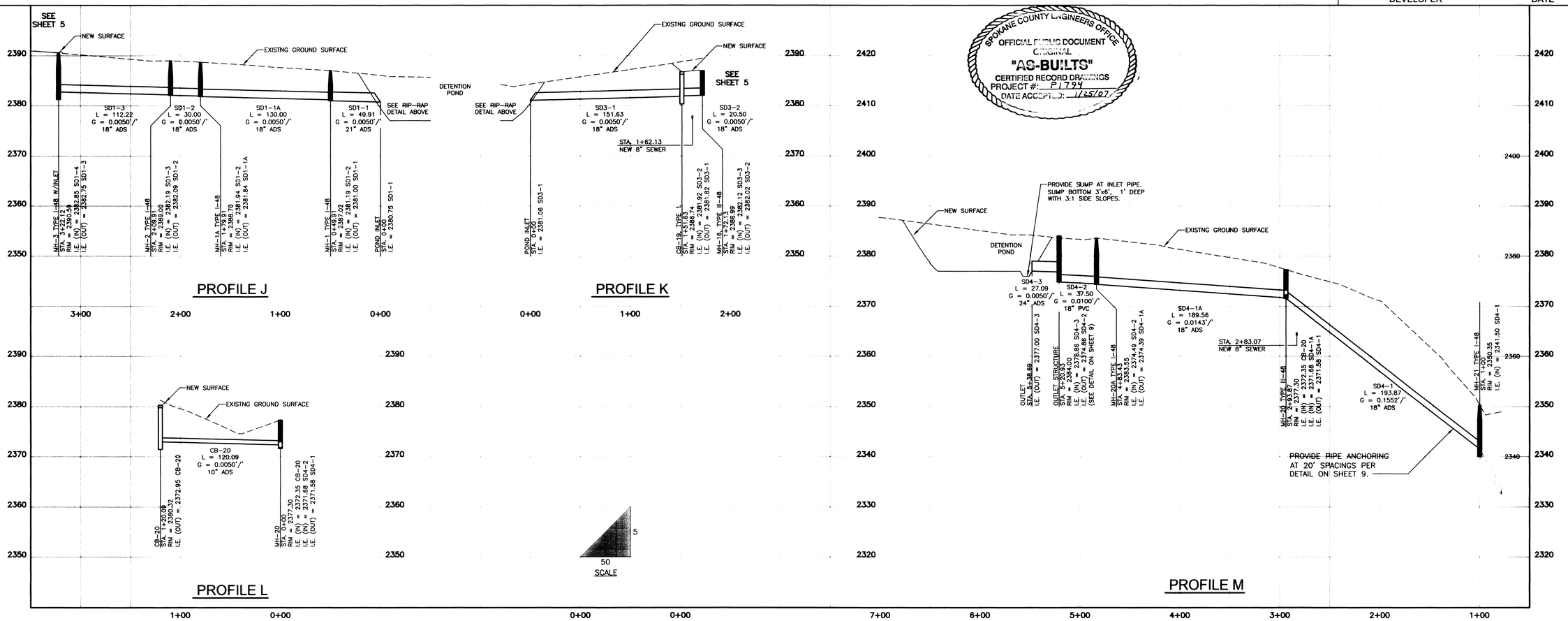

SPOKANE COUNTY ENGINEERS OFFICE
OFFICIAL PUBLIC DOCUMENT
ORIGINAL
"AS-BUILTS"
CERTIFIED RECORD DRAWINGS
PROJECT #: P1794
DATE ACCEPTED: 1/25/07

EXPIRES: 6/25/06

EXPIRES: 10/23/05

RECORD DRAWINGS

These drawings represent the construction work as near as can be determined. These drawings are compiled from information gathered during the construction activity by the contractor(s) and the inspector(s). These drawings are thought to be accurate but no warranty is expressed or implied as to the exactness. These drawings should be used only as a general representation of the constructed work. I have reviewed the construction and to my knowledge find it to be in substantial conformance with approved certified plans and Standard Specifications except as noted.

Engineer: Randy Noble

Date: 1/24/07

REVISIONS
BY DATE DESCR
BY DATE DESCR
BY DATE DESCR

TD&H

THOMAS, DEAN & HOSKINS, INC.
ENGINEERING CONSULTANTS
GREAT FALLS–BOZEMAN–KALISPELL
SPOKANE LEWISTON
MONTANA WASHINGTON IDAHO

DRAWN BY:	EJD
DESIGNED BY:	DAW
QUALITY CHECK:	CWM
DATE:	1/23/07
JOB NO.	S01-062
FIELDBOOK	SDR

NORTHVIEW ESTATES
SPOKANE COUNTY, WASHINGTON

DRAINAGE STRUCTURES PAN AND PROFILES

CAD NO.S01-062-SD06.DWG

SHEET 6 OF 9

C:\Documents and Settings\LAA\Desktop\dwg\S01-062-SD06T.dwg, 1/23/2007 4:16:57 PM, TDH SPOKANE, LAA

P 1794 Eng As Builts

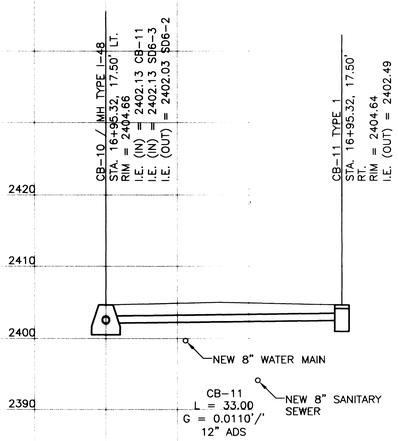

PROFILE A

NORTHVIEW LANE 16+95.32

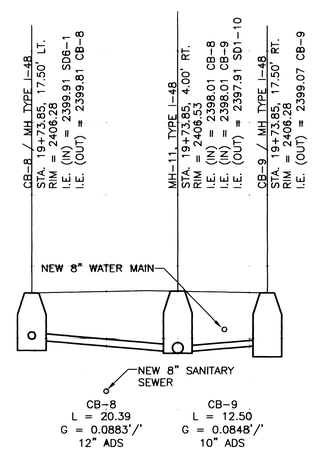

PROFILE B

NORTHVIEW LANE 19+73.96

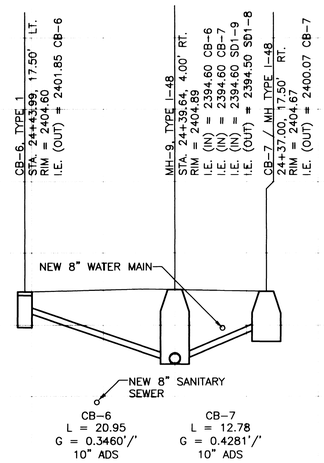

PROFILE C

NORTHVIEW LANE 24+39.64

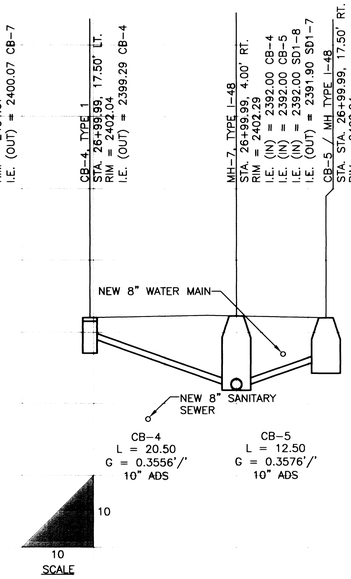

PROFILE D

NORTHVIEW LANE 26+99.99

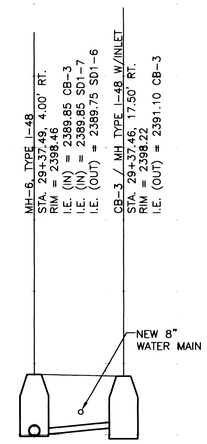

PROFILE E

NORTHVIEW LANE 29+37.49

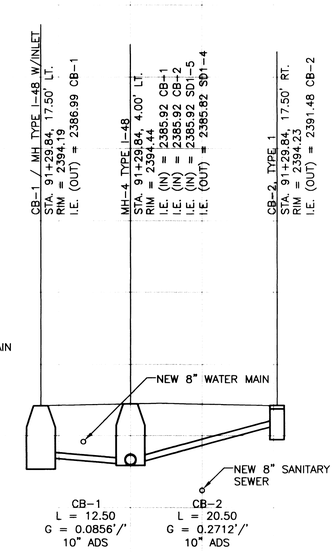

PROFILE F

EDNA LANE 91+29.84

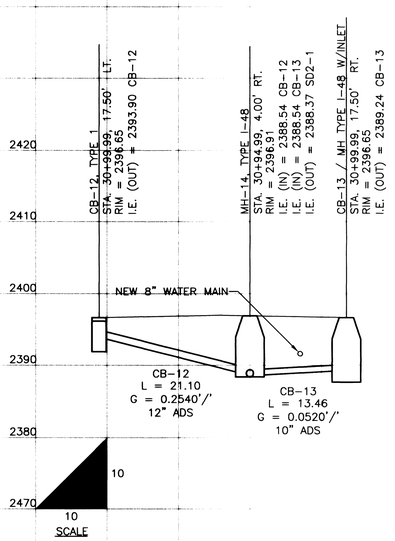

PROFILE G

NORTHVIEW LANE 30+94.99

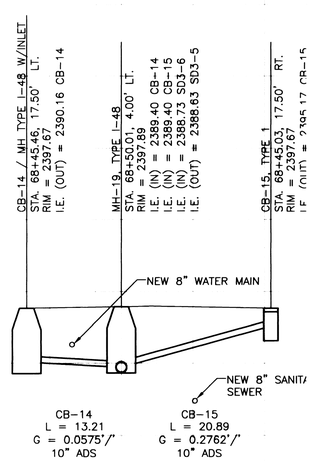

PROFILE H

BRAEDEN LANE 69+50.01

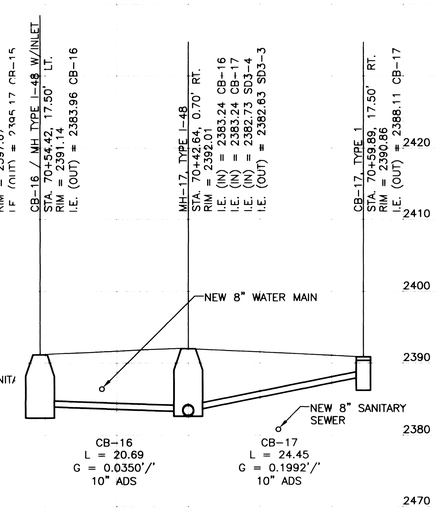

PROFILE I

BRAEDEN LANE 70+42.64

SPOKANE COUNTY ENGINEERS OFFICE
OFFICIAL PUBLIC DOCUMENT
ORIGINAL
"AS-BUILTS"
CERTIFIED RECORD DRAWINGS
PROJECT #: P1794
DATE ACCEPTED: 1/25/07

RECORD DRAWINGS

These drawings represent the construction work as near as can be determined. These drawings are compiled from information gathered during the construction activity by the contractor(s) and the inspector(s). These drawings are thought to be accurate but no warranty is expressed or implied as to the exactness. These drawings should be used only as a general representation of the constructed work. I have reviewed the construction and to my knowledge find it to be in substantial conformance with approved certified plans and Standard Specifications except as noted.

Engineer: Randy Noble

Date: 1/24/07

DEVELOPER DATE

EXPIRES: 6/25/06

EXPIRES: 10/23/05

REVISIONS

BY DATE DESCR
BY DATE DESCR
BY DATE DESCR

THOMAS, DEAN & HOSKINS, INC.
ENGINEERING CONSULTANTS
GREAT FALLS–BOZEMAN–KALISPELL
LEWISTON
MONTANA
WASHINGTON
IDAHO

TD&H

DRAWN BY:	EJD
DESIGNED BY:	DAW
QUALITY CHECK:	CWM
DATE:	1/23/07
JOB NO.	S01-062
FIELDBOOK	SDR

NORTHVIEW ESTATES
SPOKANE COUNTY, WASHINGTON

DRAINAGE STRUCTURES
CATCH BASIN PROFILES

CAD NO:S01-062-SD07 .DWG

SHEET 7 OF 9

P-1794 Eng & Built

C:\Documents and Settings\LAA\Desktop\dwg\S01-062-SD07.dwg, 1/23/2007 3:41:03 PM, TDH SPOKANE, LAA

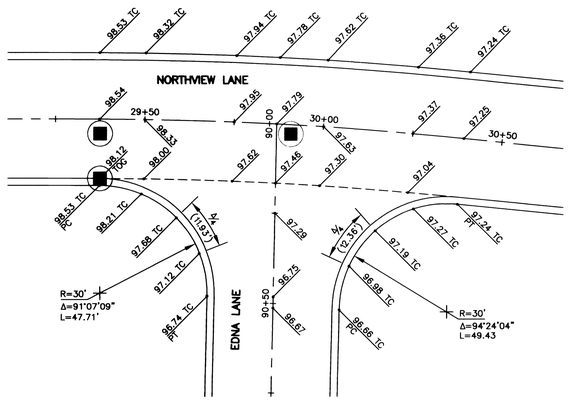

NORTHVIEW LANE & EDNA LANE INTERSECTION

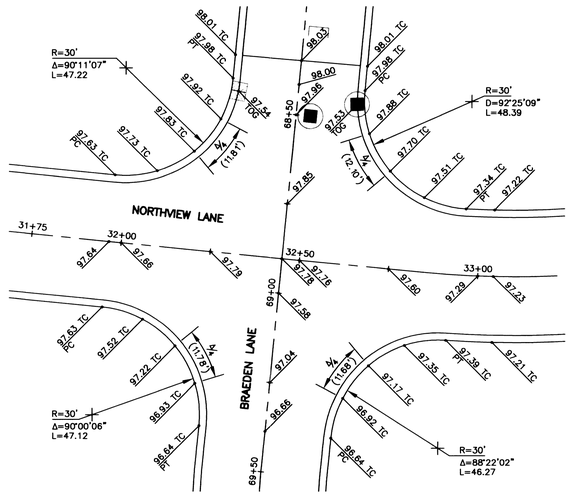

NORTHVIEW & BRAEDEN LANES INTERSECTION (NORTH)

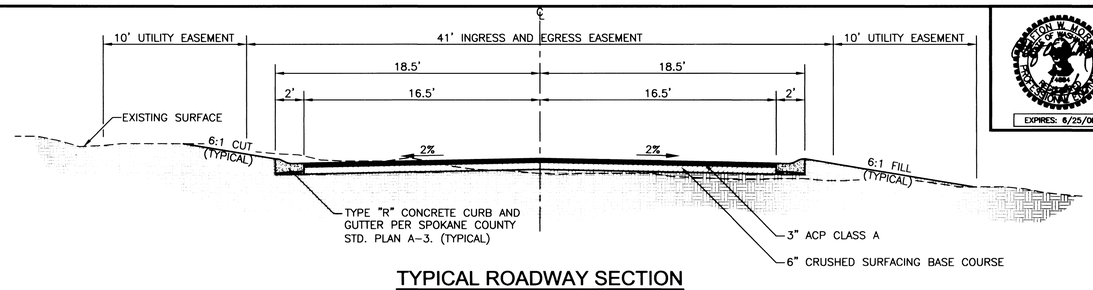

TYPICAL ROADWAY SECTION

0 5' 10' 15'
SCALE

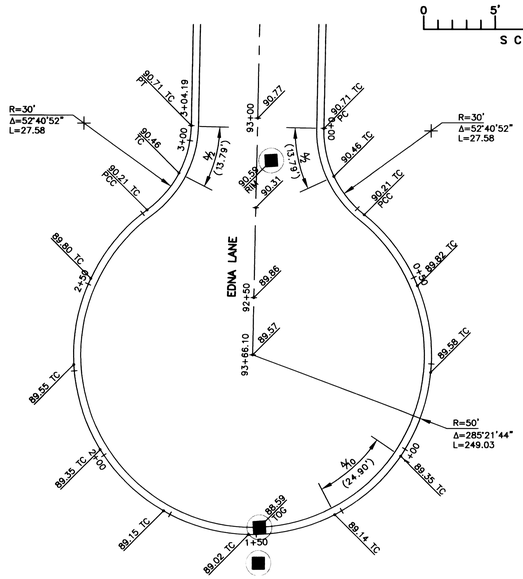

EDNA LANE CUL DE SAC

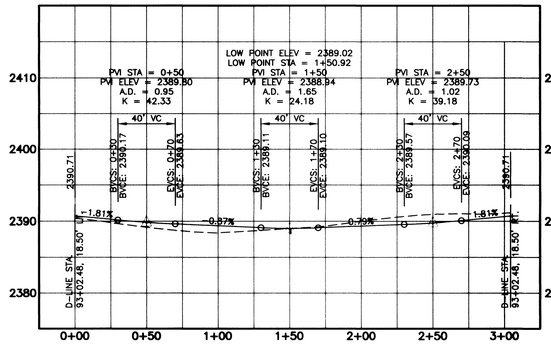

EDNA LANE CUL DE SAC
PROFILE - TOP OF CURB

10'
50'
SCALE

RECORD DRAWINGS

These drawings represent the construction work as near as can be determined. These drawings are compiled from information gathered during the construction activity by the contractor(s) and the inspector(s). These drawings are thought to be accurate but no warranty is expressed or implied as to the exactness. These drawings should be used only as a general representation of the constructed work. I have reviewed the construction and to my knowledge find it to be in substantial conformance with approved certified plans and Standard Specifications except as noted.

Engineer: Randy Noble

Date: 1/24/07

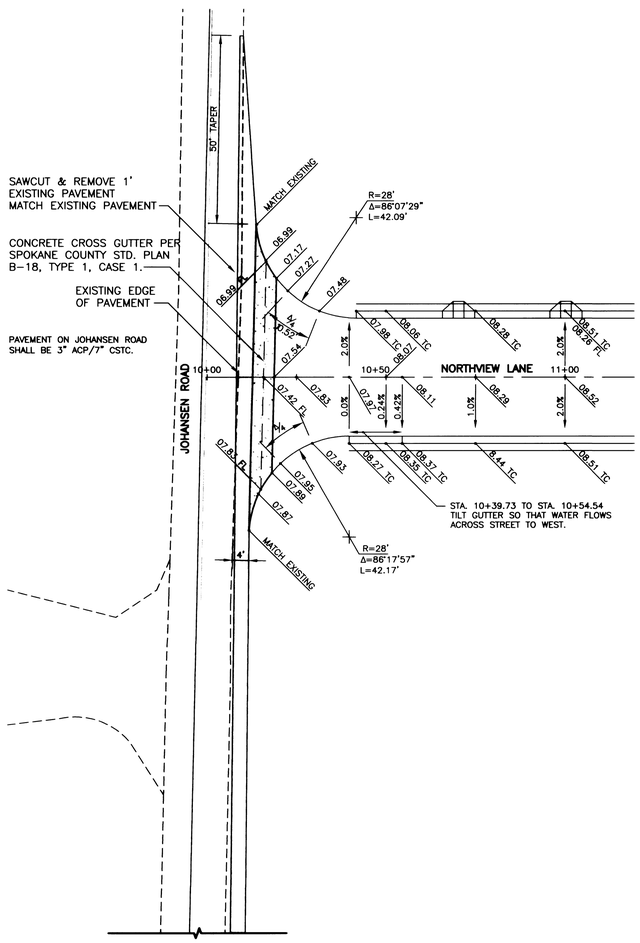

NORTHVIEW LANE & JOHANSEN ROAD

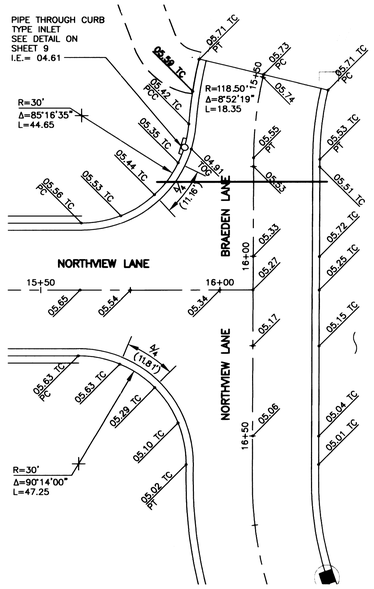

NORTHVIEW & BRAEDEN LANES INTERSECTION (SOUTH)

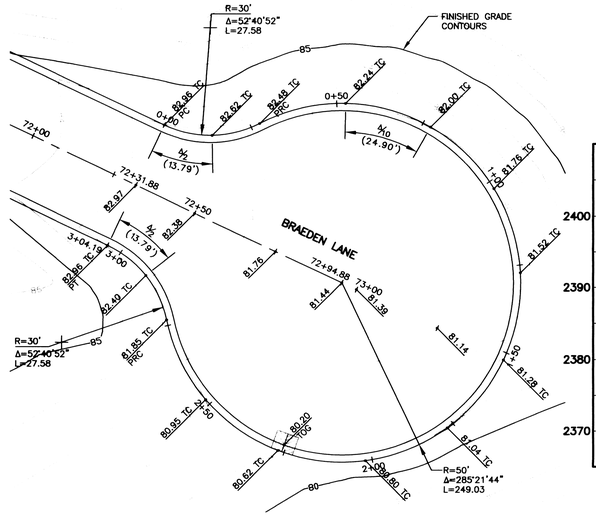

BRAEDEN LANE CUL DE SAC

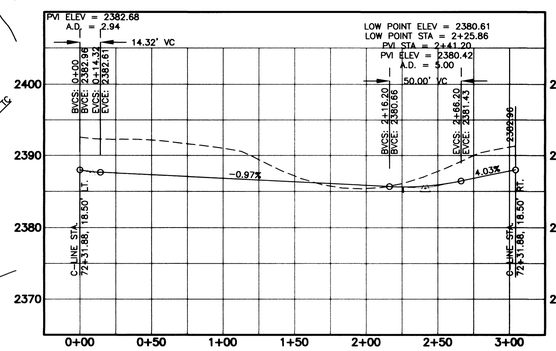

BRAEDEN LANE CUL DE SAC
PROFILE - TOP OF CURB

10'
50'
SCALE

0 20' 40' 60'
SCALE

SPOKANE COUNTY ENGINEERS OFFICE
OFFICIAL PUBLIC DOCUMENT
ORIGINAL
"AS-BUILTS"
CERTIFIED RECORD DRAWINGS
PROJECT #: P 1794
DATE ACCEPTED: 1/25/07

DEVELOPER DATE

REVISIONS
BY DATE DESCR
BY DATE DESCR
BY DATE DESCR

EXPIRES: 6/25/08
EXPIRES: 10/23/05

THOMAS, DEAN & HOSKINS, INC.
ENGINEERING CONSULTANTS
GREAT FALLS–BOZEMAN–KALISPELL
SPOKANE
LEWISTON
MONTANA
WASHINGTON
IDAHO

TD&H

DRAWN BY:	EJD
DESIGNED BY:	DAW
QUALITY CHECK:	CWM
DATE:	1/23/07
JOB NO.	S01-062
FIELDBOOK	SDR

NORTHVIEW ESTATES
SPOKANE COUNTY, WASHINGTON

TYPICAL ROADWAY SECTION, INTERSECTION PLANS AND CUL-DE-SAC PLANS & PROFILES

CAD NO:S01-062-SD08 .DWG

SHEET 8 OF 9

P 1794 Eng As-Built

C:\Documents and Settings\LAA\Desktop\dwg\S01-062-SD08.dwg, 1/23/2007 3:41:33 PM, TDH SPOKANE, LAA

RECORD DRAWINGS

These drawings represent the construction work as near as can be determined. These drawings are compiled from information gathered during the construction activity by the contractor(s) and the inspector(s). These drawings are thought to be accurate but no warranty is expressed or implied as to the exactness. These drawings should be used only as a general representation of the constructed work. I have reviewed the construction and to my knowledge find it to be in substantial conformance with approved certified plans and Standard Specifications except as noted.

Engineer: Randy Noble

Date: 1/24/07

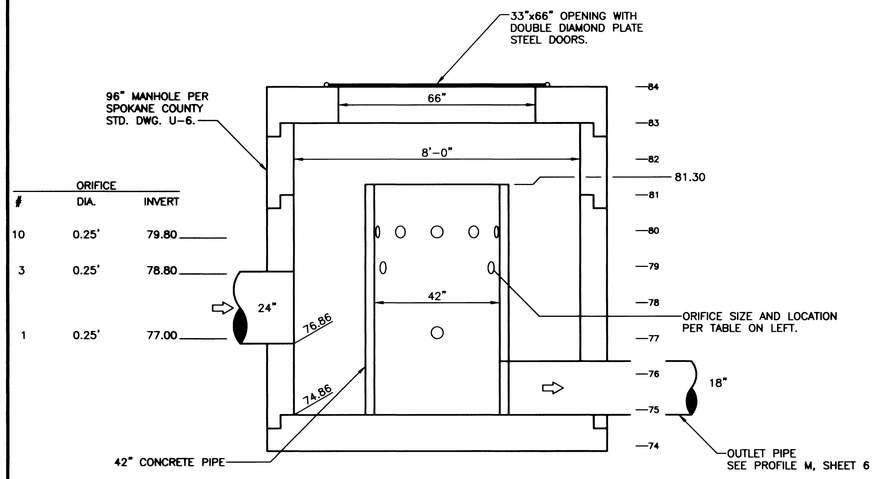

DETENTION POND OUTLET STRUCTURE DETAIL

0 2' 4' 6'
SCALE

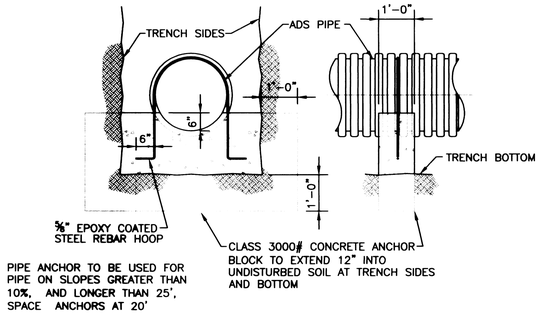

PIPE ANCHOR DETAIL

0 2' 4' 6'
SCALE

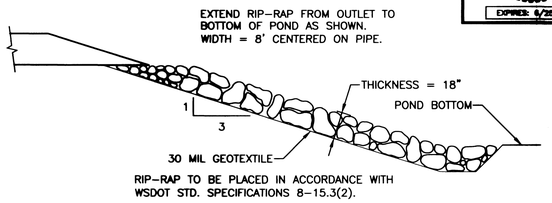

RIP-RAP DETAIL

NOT TO SCALE

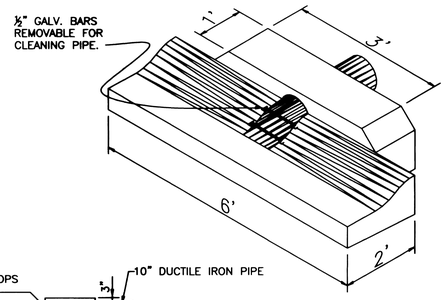

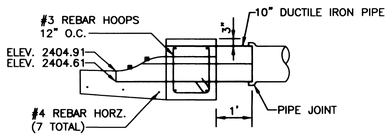

NOTE: REINFORCE 6' SECTION OF CURB. MAKE CONSTRUCTION JOINT AT EACH END.

PIPE DRAIN AT CURB

NOT TO SCALE

SPOKANE COUNTY ENGINEERS OFFICE
OFFICIAL PUBLIC DOCUMENT
ORIGINAL
"AS-BUILTS"
CERTIFIED RECORD DRAWINGS
PROJECT #: P1794
DATE ACCEPTED: 1/25/07

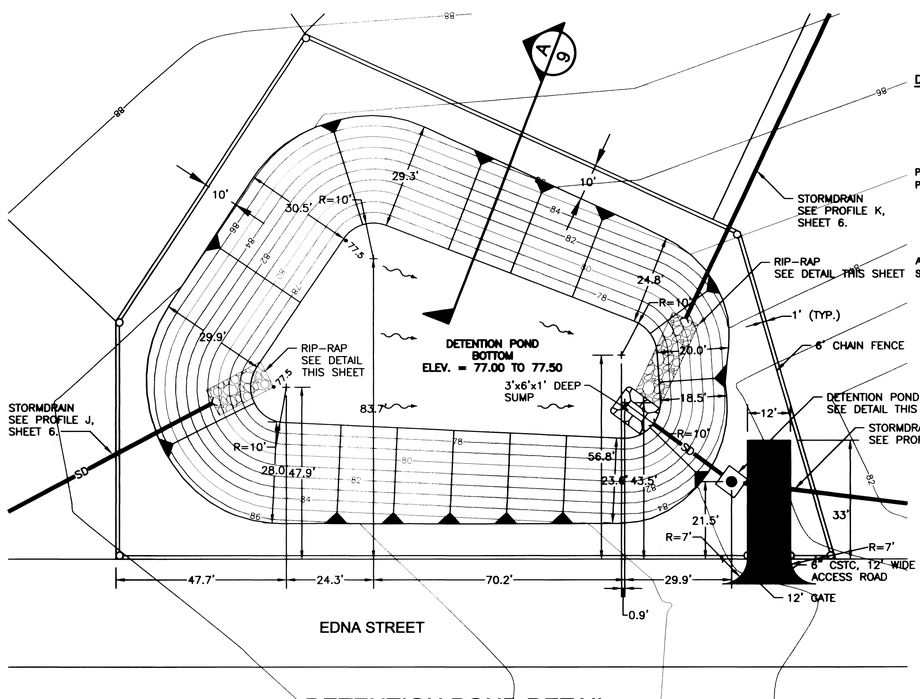

DETENTION POND DETAIL

0 20' 40' 60'
SCALE

DRYLAND GRASS SEED MIX FOR POND BOTTOM AND SLOPES

20 PERCENT	ELKA PERENNIAL RYE
20 PERCENT	DURAR HARD FESCUE
45 PERCENT	COVAR SHEEP/FESCUE
15 PERCENT	REUBENS CANADIAN BLUEGRASS

PROVIDE MIXTURE COMPOSED OF GRASS SEED AND FERTILIZER IN PERCENTAGES AS FOLLOWS:

GRASS SEED: 90 LBS. PER ACRE
FERTILIZER: 16-16-16 TIMED RELEASE COMPOSITION, 300 LBS. PER ACRE

ALL SEEDING SHALL BE DONE IN ACCORDANCE WITH WSDOT STANDARD SPECIFICATIONS, SEC. 8-01.

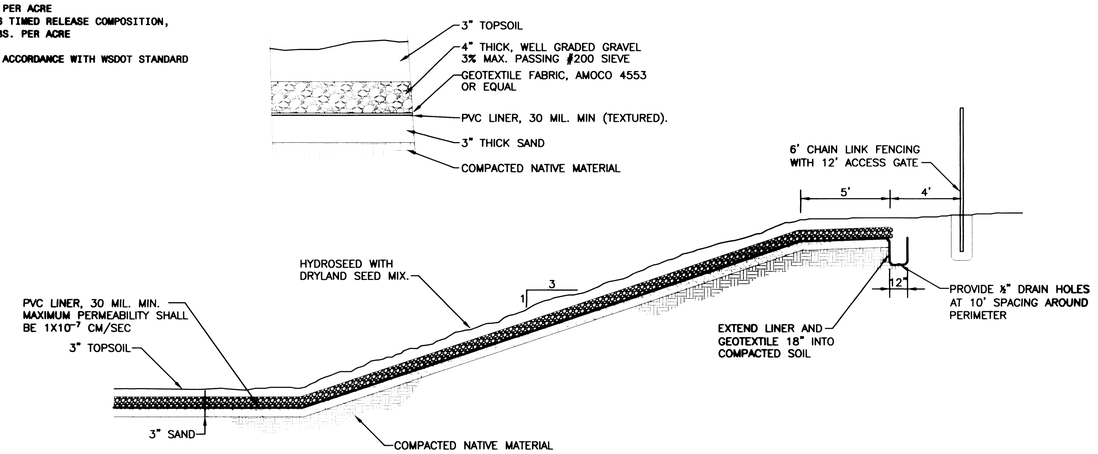

DETENTION POND SECTION A/9

NOT TO SCALE

DEVELOPER DATE

EXPIRES: 6/30/08 EXPIRES: 10/23/05

REVISIONS
DESCR BY DATE
DESCR BY DATE
DESCR BY DATE

THOMAS, DEAN & HOSKINS, INC.
ENGINEERING CONSULTANTS
GREAT FALLS–BOZEMAN–KALISPELL
MONTANA WASHINGTON IDAHO
LEWISTON
TD&H

DRAWN BY:	EJD
DESIGNED BY:	DAW
QUALITY CHECK:	CWM
DATE:	1/23/07
JOB NO.	801-062
FIELDBOOK	SDR

NORTHVIEW ESTATES
SPOKANE COUNTY, WASHINGTON

MISCELLANEOUS DETAILS

CAD NO801-062-SD09.DWG

SHEET 9 OF 9

P-1794 Eng As Built

C:\Documents and Settings\LAA\Desktop\dwg\801-062-SD09.dwg, 1/23/2007 4:10:43 PM, TDH SPOKANE, LAA