MOUNT VIEW ESTATES

THE NE 1/4 OF SECTION 34, T.27 N., R.43 E.W.M., SPOKANE COUNTY, WASHINGTON

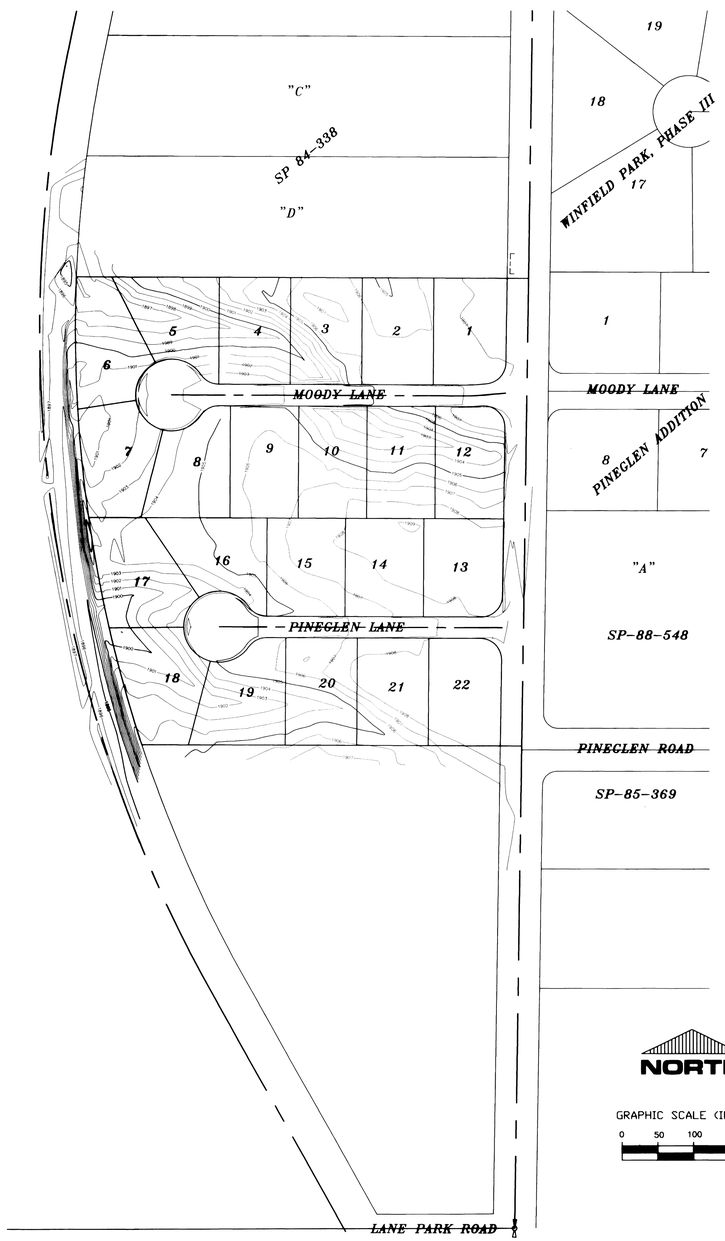

CONSTRUCTION NOTES

1) All work and materials shall be in conformance with the "SPOKANE COUNTY STANDARDS FOR ROAD AND SEWER CONSTRUCTION" 2001, and as amended.

2) Locations of existing utilities shown in the plans are approximate. The Contractor shall be responsible for locating all underground utilities. Any conflicting utilities shall be relocated prior to construction of road and drainage facilities.

3) The Contractor is required to have a complete set of the approved road and drainage plans on the job site whenever construction is in progress.

4) If the Contractor discovers any discrepancies between the plans and existing conditions encountered, the Contractor shall immediately notify the Design Engineer and the Spokane County Engineers office.

5) For construction of drywells, install filter fabric (Amoco 4545 or approved equivalent) between the washed drainrock and the native soils.

6) Prior to site construction, the Contractor is responsible for locating underground utilities. Call the underground utility location service at 456-8000 before you dig.

7) For any curb grades less than 0.8% (0.008 ft./ft.), a Washington State licensed Professional Land Surveyor shall verify that the curb forms are at the grades noted on the approved plans, prior to placement of curb material. The Contractor is responsible for arranging and coordinating work with the Professional Land Surveyor.

8) The floor of a Grassed Percolation Area (GPA) swale includes the level portion of the floor of the swale, and the side slopes of the swale up to the GPA overflow elevation or top of drywell. The soil located in the floor of the GPA swale shall be a medium to well-draining material, with a minimum infiltration rate of 0.5 inches per hour. The Engineer shall provide a written statement which verifies that all GPA swales conform to this requirement. This written statement shall be submitted to the Spokane County Engineer's Office prior to installing finished landscaping/sod and prior to final acceptance. The swale floor material shall be installed to a native soil stratum which also meets or exceeds this minimum percolation rate of 0.5 inches per hour.

9) An Erosion/Sedimentation Control (ESC) plan is required for this project. Implementation of the ESC plan, and construction, maintenance, and upgrading of the ESC facilities are the responsibility of the Developer until all construction is completed and accepted by Spokane County, or until vegetation is established throughout the site, and accepted by Spokane County, whichever is later.

10) Approval of the ESC plan does not constitute approval of any of the proposed road, storm drainage, grading or utility design elements shown on the ESC plan.

11) The erosion/sedimentation control measures shown are the minimum requirements for the anticipated site conditions. The Contractor shall inspect and maintain these ESC measures daily, and shall maintain and upgrade these measures as necessary to prevent sediment-laden water from either flowing off the site, or into new/existing storm drainage facilities, such as drywells, culverts, or gravel galleries.

12) Geotextile fabric is to be placed on the rims of drywells, catch basins and inlets until such time the vegetation on the site is established and the threat of sediment deposition into the drainage system is mitigated.

CALL BEFORE YOU DIG: 456-8000

FIRE DISTRICT CERTIFICATION

Spokane County Fire District No. 4 has approved the street plan for MOUNT VIEW ESTATES. The plan is in conformance with our requirements for road widths and turnaround requirements in the above named project.

Signature: [signature] Title: Deputy Chief Date: 10/13/06

ENGINEER'S CERTIFICATION

The design improvements shown in this set of plans conform to the applicable editions of the Spokane County standards for road and sewer construction and Spokane County guidelines for stormwater management. All design deviations have been approved by the Spokane County Engineer. I approve these plans for construction.

ENGINEER'S APPROVAL: Kevin W. McMullen DATE: 10/10/06

DEVELOPERS APPROVAL: Tod J Lasley DATE: 10/12/06

SPOKANE COUNTY ENGINEERS OFFICE
OFFICIAL PUBLIC DOCUMENT ORIGINAL
CONSTRUCTION PLANS
PROJECT #: P1956
DATE ACCEPTED: 10/16/06
ACCEPTANCE EXPIRES: 10/16/08
PROJECT LANE MILES PUBLIC: —
PROJECT LANE MILES PRIVATE: 0.17
CONSTRUCTION DOCUMENTATION AND CERTIFIED RECORD DRAWINGS, "AS-BUILTS" ARE REQUIRED PRIOR TO COUNTY ACCEPTANCE AND ESTABLISHMENT OF THE ROADS AND DRAINAGE FACILITIES FOR MAINTENANCE.
PERMIT REQUIRED! (509) 477-3300
NOTIFY PERMIT ENGINEER 2 BUSINESS DAYS PRIOR TO CONSTRUCTION
REVISED

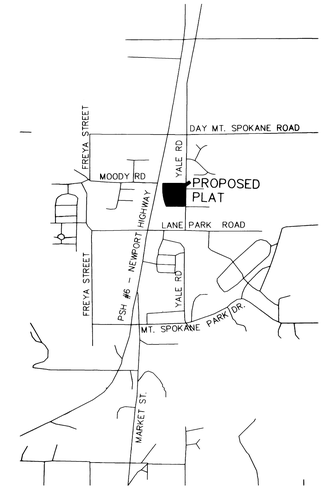

VICINITY MAP

GRAPHIC SCALE (IN FEET)
0 1000 2000 4000
1" = 2000'

PROJECT INFORMATION

Owner/Applicant:	Tod Lasley
Contact Number:	(509) 464-3911
Project Address:	107 E. Magnesium Road, Suite C Spokane, WA 99208
Property Description:	(By Simpson Engineers, Inc.)

Lot 9 of MOODY'S SUBDIVISION of the NE 1/4 of Section 34, T. 27 N., R. 43 EWM, as per plat thereof recorded in Volume "M" of Plats, Page 2;

Situate in the County of Spokane, State of Washington.

INDEX TO PLAN SET

SHEET 1 OF 4: COVERSHEET - VICINITY MAP & PLAN INDEX
SHEET 2 OF 4: EROSION & SEDIMENT CONTROL PLAN
SHEET 3 OF 4: STORMWATER DRAINAGE PLAN
SHEET 4 OF 4: STREET PLAN-PROFILE: MOODY LANE
STREET PLAN-PROFILE: PINEGLEN LANE

CALL BEFORE YOU DIG 456-8000

BY	DATE	REVISIONS / AS BUILT

DATUM		SCALE			DATE
TBM NO.		HORIZONTAL	1"=100'	DRAWN M. C. PHILLIPS	JAN. 2006
ELEVATION	1882.93	VERTICAL		CHECKED KWM	7/25/06
LOCATION	USGS Brass Disk #25 1931. NW corner of SR206 and the BNSF Railroad			APPROVED KWM	10/10/06

STATE OF WASHINGTON KEVIN W. MCMULLEN 28576 REGISTERED PROFESSIONAL ENGINEER — Kevin W. McMullen 10/10/06 — EXPIRES 10/04/06

Founded 1946
Simpson Engineers, Inc.
CIVIL ENGINEERS & LAND SURVEYORS
N. 909 ARGONNE ROAD, SPOKANE WA., 99212-2789
PHONE (509) 926-1322 FAX (509) 926-1323

TYPE OF IMPROVEMENT: STREET & DRAINAGE	
PROJECT NUMBER	SHEET NUMBER
14876	1 OF 4

MOUNT VIEW ESTATES
NE 1/4 OF SECTION 34, T. 27 N., R. 43 E.W.M.

COVERSHEET
VICINITY MAP & PLAN INDEX

Revised P-1956 Eng Road Drainage

P:\Projects\14501-15000\14876\dwg\14876.dwg 10/11/2006 09:02:39 AM PDT

MOUNT VIEW ESTATES

THE NE 1/4 OF SECTION 34, T.27 N., R.43 E.W.M., SPOKANE COUNTY, WASHINGTON

CONSTRUCTION NOTES

1) All work and materials shall be in conformance with the "SPOKANE COUNTY STANDARDS FOR ROAD AND SEWER CONSTRUCTION" 2001, and as amended.

2) Locations of existing utilities shown in the plans are approximate. The Contractor shall be responsible for locating all underground utilities. Any conflicting utilities shall be relocated prior to construction of road and drainage facilities.

3) The Contractor is required to have a complete set of the approved road and drainage plans on the job site whenever construction is in progress.

4) If the Contractor discovers any discrepancies between the plans and existing conditions encountered, the Contractor shall immediately notify the Design Engineer and the Spokane County Engineers office.

5) For construction of drywells, install filter fabric (Amoco 4545 or approved equivalent) between the washed drainrock and the native soils.

6) Prior to site construction, the Contractor is responsible for locating underground utilities. Call the underground utility location service at 456-8000 before you dig.

7) For any curb grades less than 0.8% (0.008 ft./ft.), a Washington State licensed Professional Land Surveyor shall verify that the curb forms are at the grades noted on the approved plans, prior to placement of curb material. The Contractor is responsible for arranging and coordinating work with the Professional Land Surveyor.

8) The floor of a Grassed Percolation Area (GPA) swale includes the level portion of the floor of the swale, and the side slopes of the swale up to the GPA overflow elevation or top of drywell. The soil located in the floor of the GPA swale shall be a medium to well-draining material, with a minimum infiltration rate of 0.5 inches per hour. The Engineer shall provide a written statement which verifies that all GPA swales conform to this requirement. This written statement shall be submitted to the Spokane County Engineer's Office prior to installing finished landscaping/sod and prior to final acceptance. The swale floor material shall be installed to a native soil stratum which also meets or exceeds this minimum percolation rate of 0.5 inches per hour.

9) An Erosion/Sedimentation Control (ESC) plan is required for this project. Implementation of the ESC plan, and construction, maintenance, and upgrading of the ESC facilities are the responsibility of the Developer until all construction is completed and accepted by Spokane County, or until vegetation is established throughout the site, and accepted by Spokane County, whichever is later.

10) Approval of the ESC plan does not constitute approval of any of the proposed road, storm drainage, grading or utility design elements shown on the ESC plan.

11) The erosion/sedimentation control measures shown are the minimum requirements for the anticipated site conditions. The Contractor shall inspect and maintain these ESC measures daily, and shall maintain and upgrade these measures as necessary to prevent sediment-laden water from either flowing off the site, or into new/existing storm drainage facilities, such as drywells, culverts, or gravel galleries.

12) Geotextile fabric is to be placed on the rims of drywells, catch basins and inlets until such time the vegetation on the site is established and the threat of sediment deposition into the drainage system is mitigated.

CALL BEFORE YOU DIG: 456-8000

FIRE DISTRICT CERTIFICATION

Spokane County Fire District No. 4 has approved the street plan for MOUNT VIEW ESTATES. The plan is in conformance with our requirements for road widths and turnaround requirements in the above named project.

Signature — Title: Deputy Chief — Date: 9/19/06

ENGINEER'S CERTIFICATION

The design improvements shown in this set of plans conform to the applicable editions of the Spokane County standards for road and sewer construction and Spokane County guidelines for stormwater management. All design deviations have been approved by the Spokane County Engineer. I approve these plans for construction.

Kevin W. McMullen — ENGINEER'S APPROVAL — DATE 9/18/06

Ted J. Lasley — DEVELOPERS APPROVAL — DATE 9/19/06

SPOKANE COUNTY ENGINEERS OFFICE
OFFICIAL PUBLIC DOCUMENT ORIGINAL
CONSTRUCTION PLANS
PROJECT #: P1956
DATE ACCEPTED: 9/20/06
ACCEPTANCE EXPIRES: 9/20/08
PROJECT LANE MILES PUBLIC: —
PROJECT LANE MILES PRIVATE: 0.17
CONSTRUCTION DOCUMENTATION AND CERTIFIED RECORD DRAWINGS, "AS-BUILTS" ARE REQUIRED PRIOR TO COUNTY ACCEPTANCE AND ESTABLISHMENT OF THE ROADS AND DRAINAGE FACILITIES FOR MAINTENANCE.
PERMIT REQUIRED! (509) 477-3600
NOTIFY PERMIT ENGINEER [illegible] BUSINESS DAYS PRIOR TO CONSTRUCTION.

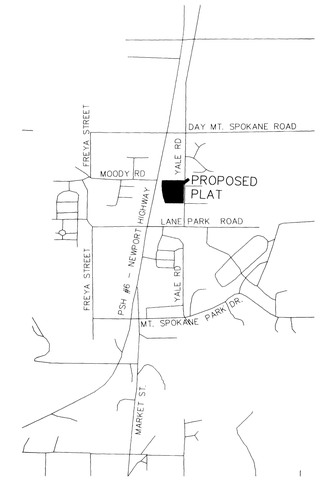

VICINITY MAP

GRAPHIC SCALE (IN FEET)
0 1000 2000 4000
1" = 2000'

PROJECT INFORMATION

Owner/Applicant:	Tod Lasley
Contact Number:	(509) 464-3911
Project Address:	107 E. Magnesium Road, Suite C Spokane, WA 99208
Property Description:	(By Simpson Engineers, Inc.)

Lot 9 of MOODY'S SUBDIVISION of the NE 1/4 of Section 34, T. 27 N., R. 43 EWM, as per plat thereof recorded in Volume "M" of Plats, Page 2;

Situate in the County of Spokane, State of Washington.

INDEX TO PLAN SET

SHEET 1 OF 4: COVERSHEET - VICINITY MAP & PLAN INDEX
SHEET 2 OF 4: EROSION & SEDIMENT CONTROL PLAN
SHEET 3 OF 4: STORMWATER DRAINAGE PLAN
SHEET 4 OF 4: STREET PLAN-PROFILE: MOODY LANE
STREET PLAN-PROFILE: PINEGLEN LANE

CALL BEFORE YOU DIG 456-8000

BY	DATE	REVISIONS / AS BUILT

DATUM	SCALE		DATE
TBM NO.	HORIZONTAL 1"=100'	DRAWN M. C. PHILLIPS	JAN. 2006
ELEVATION 1882.93	VERTICAL	CHECKED KWM	7/25/06
LOCATION USGS Brass Disk #M25 1931, NW corner of SR206 and the BNSF Railroad		APPROVED KWM	8/25/06

KEVIN W. McMULLEN, STATE OF WASHINGTON, 18576, REGISTERED PROFESSIONAL ENGINEER — EXPIRES 10/04/06

Kevin W. McMullen 8/25/06

Founded 1946
Simpson Engineers, Inc.
CIVIL ENGINEERS & LAND SURVEYORS
N. 909 ARGONNE ROAD, SPOKANE WA., 99212-2789
PHONE (509) 926-1322 FAX (509) 926-1323

TYPE OF IMPROVEMENT: STREET & DRAINAGE

PROJECT NUMBER	SHEET NUMBER
14876	1 OF 4

MOUNT VIEW ESTATES
NE 1/4 OF SECTION 34, T. 27 N, R. 43 E.W.M.

COVERSHEET
VICINITY MAP & PLAN INDEX

P:\Projects\14501-15000\14876\dwg\14876.dwg 8/29/2006 6:47:55 AM PST

P-1956 Eng Road Drainage

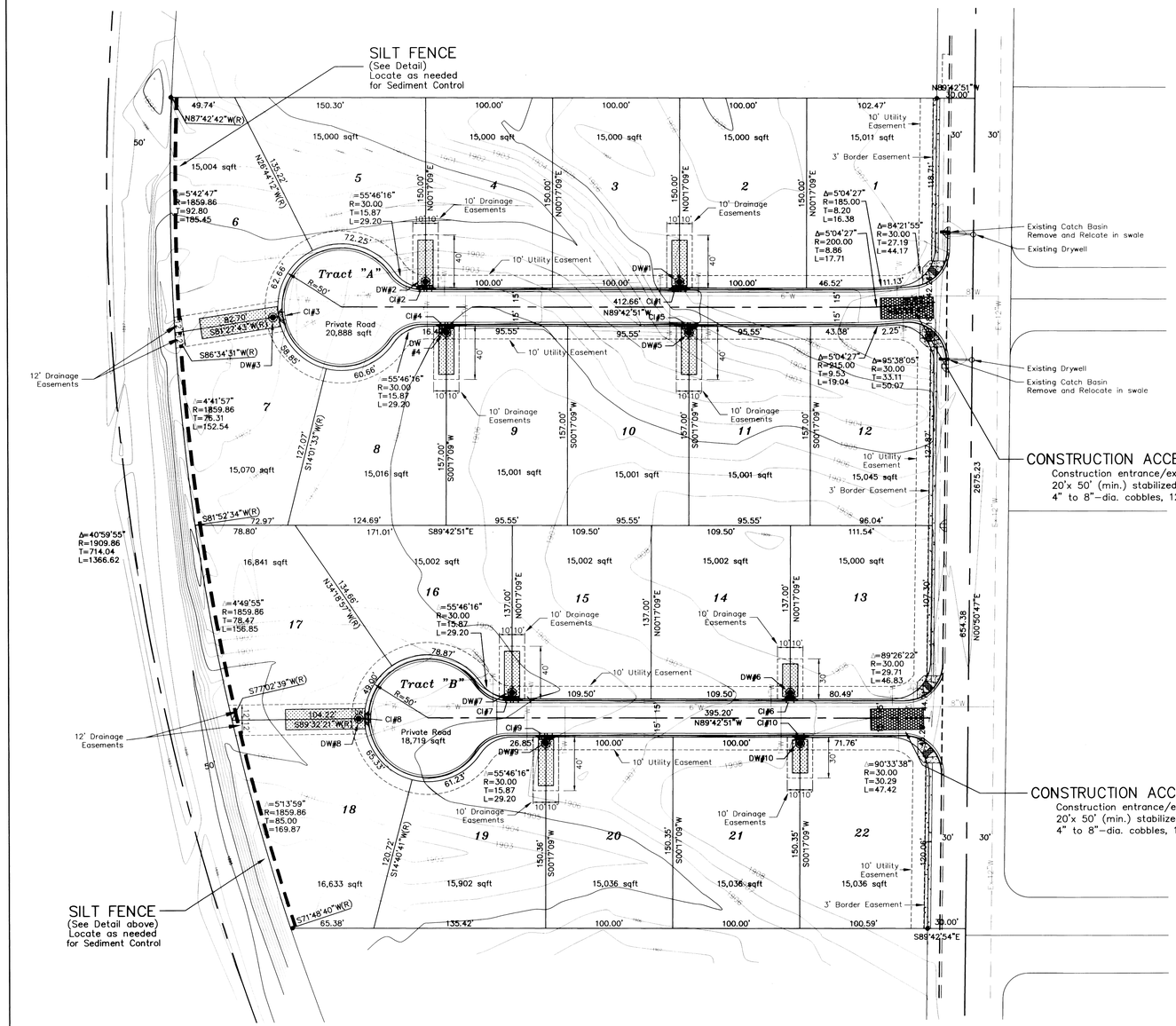

TEMPORARY EROSION AND SEDIMENT CONTROL NOTES

1) All work and materials shall be in conformance with the "SPOKANE COUNTY STANDARDS FOR ROAD AND SEWER CONSTRUCTION" 2001, and as amended.

2) Locations of existing utilities shown on plans are approximate. The Contractor shall be responsible for locating all underground utilities prior to site construction. Call the underground utility location service at 456-8000 before you dig. Any conflicting utilities shall be relocated prior to construction of road and drainage facilities.

3) The Contractor is required to have a complete set of the approved road and/or drainage plans on the job site whenever construction is in progress.

4) If the Contractor discovers any discrepancies between the plans and existing conditions encountered, the Contractor shall immediately notify the Design Engineer and Spokane County.

5) This Erosion & Sediment Control (ESC) plan is required for this project. Implementation of the ESC plan, and construction, maintenance, and upgrading of the ESC facilities are the responsibility of the Developer until all construction is completed and accepted by Spokane County, or until vegetation is established throughout the site, and accepted by Spokane County, whichever is later.

6) Approval of the ESC plan does not constitute approval of any of the proposed road, storm drainage, grading or utility design elements shown on the ESC plan.

7) The erosion/sedimentation control measures shown are the minimum requirements for the anticipated site conditions. The Contractor shall inspect and maintain these ESC measures daily, and shall maintain and upgrade these measures as necessary to prevent sediment-laden water from either flowing off the site, or into new/existing storm drainage facilities, such as drywells, culverts, or gravel galleries.

8) The Contractor/Developer is responsible for installing Rock Construction Entries at any and all locations used to enter or exit the project site.

9) Geotextile fabric is to be placed on the rims of drywells, catch basins and inlets until such time as the vegetation on the site is established and the threat of sediment deposition into the drainage system is mitigated.

10) All temporary erosion and sediment control facilities shall be removed within 30 days after final site stabilization or after the temporary control facilities are no longer needed. Trapped sediment shall be removed from the project site or stabilized on-site. Stabilize disturbed soil areas resulting from the removal of the temporary control facilities.

SILT FENCE DETAIL

NOT TO SCALE

SILTCO 180 SF SPEC

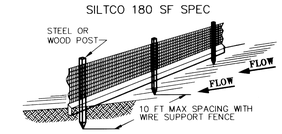

SILT FENCE SECTION

NOT TO SCALE

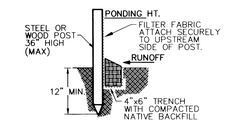

SILT FENCE NOTES

1. INSPECT AND REPAIR FENCE AFTER EACH STORM EVENT AND REMOVE SEDIMENT WHEN NECESSARY.

2. REMOVED SEDIMENT SHALL BE DEPOSITED TO AN AREA THAT WILL NOT CONTRIBUTE SEDIMENT OFF-SITE AND CAN BE PERMANENTLY STABILIZED.

3. SILT FENCE SHALL BE PLACED ON SLOPE CONTOURS TO MAXIMIZE PONDING EFFICIENCY.

4. TEMPORARY SILT FENCE LOCATION SHOWN ON THIS PLAN IS SCHEMATIC IN NATURE. CONTRACTOR SHALL BE RESPONSIBLE FOR CONTROLLING ALL SILT RUNOFF DURING CONSTRUCTION.

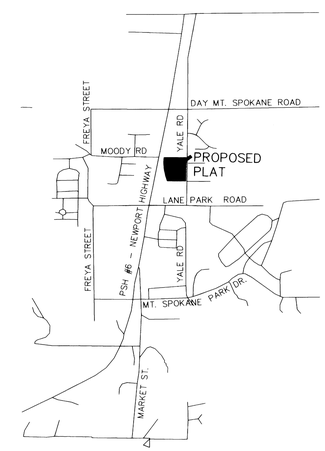

VICINITY MAP

GRAPHIC SCALE (IN FEET)

0 1000 2000 4000

1" = 2000'

PROJECT INFORMATION

Owner/Applicant: Tod Lasley

Contact Number: (509) 464-3911

Project Address: 107 E. Magnesium Road, Suite C
Spokane, WA 99208

Property Description: (By Simpson Engineers, Inc.)

Lot 9 of MOODY'S SUBDIVISION of the NE 1/4 of Section 34, T. 27 N., R. 43 EWM, as per plat thereof recorded in Volume "M" of Plats, Page 2;

Situate in the County of Spokane, State of Washington.

Description of project:
The site area is about 8.5 acres. The project involves the creation of 22 single-family residential lots.

Description of existing vegetation:
Site is mostly covered with native grasses and some Ponderosa pine trees.
There are no bodies of water on or adjacent to this property.

Site Soil Type: Marble sandy loam, 0 to 8 percent slopes

Note: Soils per USDA S.C.S. (now N.R.C.S.), 1968, "Soil Survey of Spokane County, Washington" For further soil information, refer to the project "Stormwater Drainage Report"

BM: USGS Brass Disk #M25 1931.
ELEV 1882.93 (NAVD 88)
NW corner of SR206 and the BNSF Railroad

CONTOUR INTERVAL: 5 FEET

NORTH

GRAPHIC SCALE (IN FEET)

0 25 50 100

SCALE: 1" = 50'

ENGINEER'S CERTIFICATION FOR ESC PLAN

The recommended provisions shown in this Erosion & Sediment Control Plan meet the applicable requirements for ESC plans as listed in Chapter 4.5 of the Spokane County Guidelines for Stormwater Management. I approve this plan for construction.

Tod J Lasley — DEVELOPERS APPROVAL — DATE 10/12/06

Kevin McMullin — ENGINEERS APPROVAL — DATE 10/10/06

SPOKANE COUNTY ENGINEERS OFFICE
OFFICIAL PUBLIC DOCUMENT ORIGINAL
CONSTRUCTION PLANS
PROJECT #: P1956
DATE ACCEPTED: 10/16/06
ACCEPTANCE EXPIRES: 10/16/08
PROJECT LANE MILES PUBLIC: —
PROJECT LANE MILES PRIVATE: 0.17
CONSTRUCTION DOCUMENTATION AND CERTIFIED RECORD DRAWINGS, "AS-BUILTS" ARE REQUIRED PRIOR TO COUNTY ACCEPTANCE AND ESTABLISHMENT OF THE ROADS AND DRAINAGE FACILITIES FOR MAINTENANCE.
PERMIT REQUIRED! (509) 477-3600
NOTIFY PERMIT ENGINEER 2 BUSINESS DAYS PRIOR TO CONSTRUCTION
REVISED

LEGEND FOR ESC PLAN

- - - - - - - = Temporary Silt Fencing
CB-C1 = Proposed Catch Basin Locations (protect from silt infiltration)
═══ = Proposed Storm Sewer Pipe Locations (protect from silt infiltration)
—— 2150 —— = Proposed Finished Ground Contour (Contour Interval = 5')

CALL BEFORE YOU DIG 456-8000

BY	DATE	REVISIONS / AS BUILT

DATUM		SCALE			DATE
TBM NO.		HORIZONTAL 1"=50'	DRAWN M. C. PHILLIPS		JUN. 2006
ELEVATION	1882.93	VERTICAL	CHECKED KWM		7/25/06
LOCATION	USGS Brass Disk #M25 1931. NW corner of SR206 and the BNSF Railroad		APPROVED KWM		10/10/06

KEVIN W. McMULLIN — STATE OF WASHINGTON — 28576 — REGISTERED PROFESSIONAL ENGINEER — EXPIRES 10/04/08

Founded 1946
Simpson Engineers, Inc.
CIVIL ENGINEERS & LAND SURVEYORS
N. 909 ARGONNE ROAD, SPOKANE WA., 99212-2789
PHONE (509) 926-1322 FAX (509) 926-1323

TYPE OF IMPROVEMENT: STREET & DRAINAGE	
PROJECT NUMBER	SHEET NUMBER
14876	2 OF 4

MOUNT VIEW ESTATES
NE 1/4 OF SECTION 34, T. 27 N., R. 43 E.W.M.

TEMPORARY
EROSION & SEDIMENT CONTROL PLAN

Revised P-1956 Eng Road Drainage

P:\Projects\14501-15000\14876\dwg\14876.dwg 10/11/2006 09:02:39 AM PDT

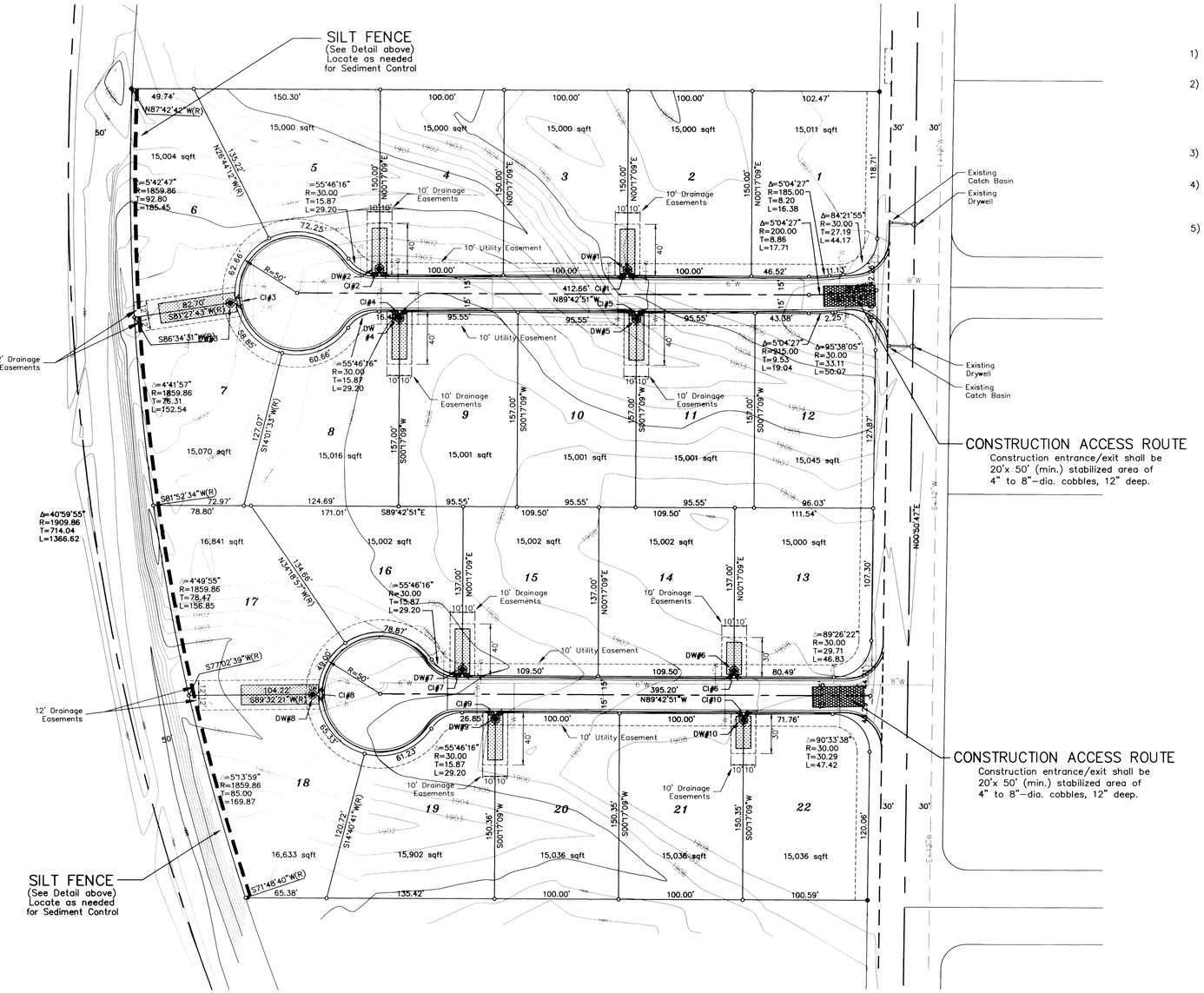

TEMPORARY EROSION AND SEDIMENT CONTROL NOTES

1) All work and materials shall be in conformance with the "SPOKANE COUNTY STANDARDS FOR ROAD AND SEWER CONSTRUCTION" 2001, and as amended.

2) Locations of existing utilities shown on plans are approximate. The Contractor shall be responsible for locating all underground utilities prior to site construction. Call the underground utility location service at 456-8000 before you dig. Any conflicting utilities shall be relocated prior to construction of road and drainage facilities.

3) The Contractor is required to have a complete set of the approved road and/or drainage plans on the job site whenever construction is in progress.

4) If the Contractor discovers any discrepancies between the plans and existing conditions encountered, the Contractor shall immediately notify the Design Engineer and Spokane County.

5) This Erosion & Sediment Control (ESC) plan is required for this project. Implementation of the ESC plan, and construction, maintenance, and upgrading of the ESC facilities are the responsibility of the Developer until all construction is completed and accepted by Spokane County, or until vegetation is established throughout the site, and accepted by Spokane County, whichever is later.

6) Approval of the ESC plan does not constitute approval of any of the proposed road, storm drainage, grading or utility design elements shown on the ESC plan.

7) The erosion/sedimentation control measures shown are the minimum requirements for the anticipated site conditions. The Contractor shall inspect and maintain these ESC measures daily, and shall maintain and upgrade these measures as necessary to prevent sediment-laden water from either flowing off the site, or into new/existing storm drainage facilities, such as drywells, culverts, or gravel galleries.

8) The Contractor/Developer is responsible for installing Rock Construction Entries at any and all locations used to enter or exit the project site.

9) Geotextile fabric is to be placed on the rims of drywells, catch basins and inlets until such time as the vegetation on the site is established and the threat of sediment deposition into the drainage system is mitigated.

10) All temporary erosion and sediment control facilities shall be removed within 30 days after final site stabilization or after the temporary control facilities are no longer needed. Trapped sediment shall be removed from the project site or stabilized on-site. Stabilize disturbed soil areas resulting from the removal of the temporary control facilities.

SILT FENCE DETAIL

NOT TO SCALE

SILTCO 180 SF SPEC

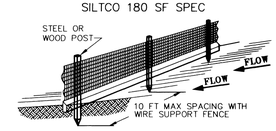

SILT FENCE SECTION

NOT TO SCALE

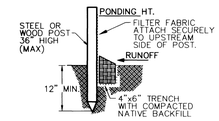

SILT FENCE NOTES

1. INSPECT AND REPAIR FENCE AFTER EACH STORM EVENT AND REMOVE SEDIMENT WHEN NECESSARY.

2. REMOVED SEDIMENT SHALL BE DEPOSITED TO AN AREA THAT WILL NOT CONTRIBUTE SEDIMENT OFF-SITE AND CAN BE PERMANENTLY STABILIZED.

3. SILT FENCE SHALL BE PLACED ON SLOPE CONTOURS TO MAXIMIZE PONDING EFFICIENCY.

4. TEMPORARY SILT FENCE LOCATION SHOWN ON THIS PLAN IS SCHEMATIC IN NATURE. CONTRACTOR SHALL BE RESPONSIBLE FOR CONTROLLING ALL SILT RUNOFF DURING CONSTRUCTION.

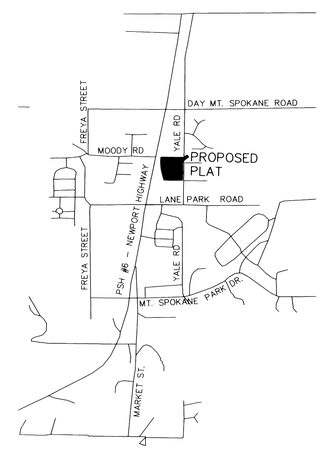

VICINITY MAP

GRAPHIC SCALE (IN FEET)

0 1000 2000 4000

1" = 2000'

PROJECT INFORMATION

Owner/Applicant: Tod Lasley

Contact Number: (509) 464-3911

Project Address: 107 E. Magnesium Road, Suite C
Spokane, WA 99208

Property Description: (By Simpson Engineers, Inc.)

Lot 9 of MOODY'S SUBDIVISION of the NE 1/4 of Section 34, T. 27 N., R. 43 EWM, as per plat thereof recorded in Volume "M" of Plats, Page 2;

Situate in the County of Spokane, State of Washington.

Description of project:
The site area is about 8.5 acres. The project involves the creation of 22 single-family residential lots.

Description of existing vegetation:
Site is mostly covered with native grasses and some Ponderosa pine trees.
There are no bodies of water on or adjacent to this property.

Site Soil Type: Marble sandy loam, 0 to 8 percent slopes

Note: Soils per USDA S.C.S. (now N.R.C.S.), 1968, "Soil Survey of Spokane County, Washington" For further soil information, refer to the project "Stormwater Drainage Report"

BM: USGS Brass Disk #M25 1931.
ELEV 1882.93 (NAVD 88)
NW corner of SR206 and the BNSF Railroad

CONTOUR INTERVAL: 5 FEET

NORTH

GRAPHIC SCALE (IN FEET)

0 25 50 100

SCALE: 1" = 50'

ENGINEER'S CERTIFICATION FOR ESC PLAN

The recommended provisions shown in this Erosion & Sediment Control Plan meet the applicable requirements for ESC plans as listed in Chapter 4.5 of the Spokane County Guidelines for Stormwater Management. I approve this plan for construction.

Tod J Lasley — DEVELOPERS APPROVAL — DATE 9/19/06

Kevin W. McMullin — ENGINEERS APPROVAL — DATE 9/18/06

SPOKANE COUNTY ENGINEERS OFFICE
OFFICIAL PUBLIC DOCUMENT ORIGINAL
CONSTRUCTION PLANS
PROJECT #: P-1956
DATE ACCEPTED: 9/20/06
ACCEPTANCE EXPIRES: 9/20/08
PROJECT LANE MILES PUBLIC: —
PROJECT LANE MILES PRIVATE: 0.17
CONSTRUCTION DOCUMENTATION AND CERTIFIED RECORD DRAWINGS, "AS-BUILTS" ARE REQUIRED PRIOR TO COUNTY ACCEPTANCE AND ESTABLISHMENT OF THE ROADS AND DRAINAGE FACILITIES FOR MAINTENANCE.
PERMIT REQUIRED! (509) 477-3600
NOTIFY PERMIT ENGINEER 2 BUSINESS DAYS PRIOR TO CONSTRUCTION

LEGEND FOR ESC PLAN

- ------- = Temporary Silt Fencing
- CB-C1 = Proposed Catch Basin Locations (protect from silt infiltration)
- ═══ = Proposed Storm Sewer Pipe Locations (protect from silt infiltration)
- 2150 = Proposed Finished Ground Contour (Contour Interval = 5')

CALL BEFORE YOU DIG 456-8000

BY	DATE	REVISIONS / AS BUILT

DATUM	SCALE		DATE
TBM NO.	HORIZONTAL 1"=50'	DRAWN M. C. PHILLIPS	JUN. 2006
ELEVATION 1882.93	VERTICAL	CHECKED KWM	7/25/06
LOCATION USGS Brass Disk #M25 1931, NW corner of SR206 and the BNSF Railroad		APPROVED KWM	8/25/06

KEVIN W. McMULLIN — STATE OF WASHINGTON — 28676 — REGISTERED PROFESSIONAL ENGINEER — 9/18/06 — EXPIRES 10/04/06

Founded 1946
Simpson Engineers, Inc.
CIVIL ENGINEERS & LAND SURVEYORS
N. 909 ARGONNE ROAD, SPOKANE WA., 99212-2789
PHONE (509) 926-1322 FAX (509) 926-1323

TYPE OF IMPROVEMENT: STREET & DRAINAGE

PROJECT NUMBER	SHEET NUMBER
14876	2 OF 4

MOUNT VIEW ESTATES
NE 1/4 OF SECTION 34, T. 27 N, R. 43 E.W.M.

TEMPORARY
EROSION & SEDIMENT CONTROL PLAN

P-1956 Eng Prod Drainage

P:\Projects\14501-15000\14876\dwg\14876.dwg 8/29/2006 6:47:55 AM PST

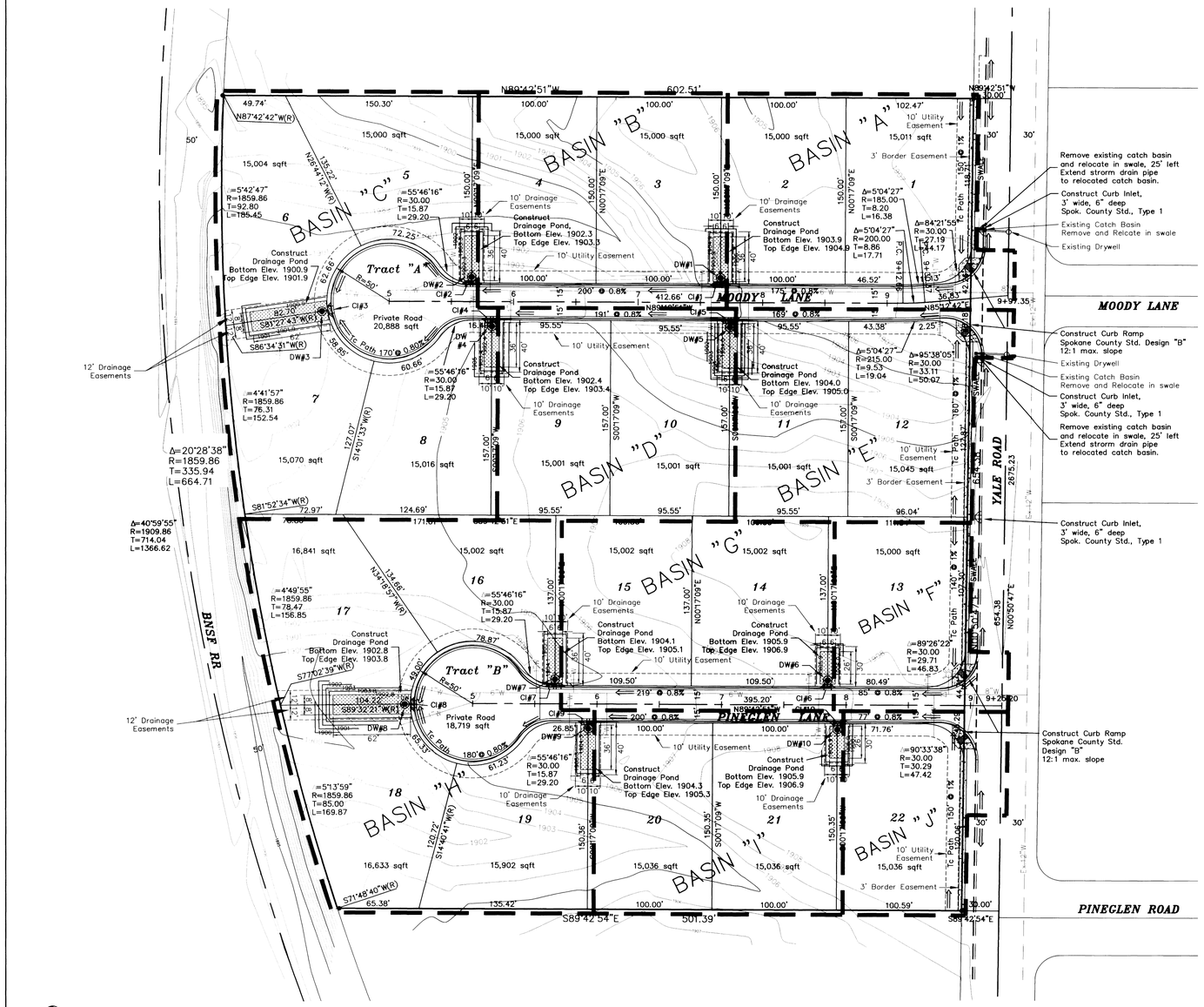

BM: USGS Brass Disk #M25 1931.
ELEV 1882.93 (NAVD 88)
NW corner of SR206 and the BNSF Railroad

CONTOUR INTERVAL: 5 FEET

NORTH

GRAPHIC SCALE (IN FEET)

0 25 50 100

SCALE: 1" = 50'

NOTE:
Exact locations, sizes and depths of underground utilities are not known. Underground utilities shown are taken from existing records and are shown for convenience of the contractor only. The Contractor is responsible to "Call Before You Dig 456-8000", and shall contact all utility owners and confirm locations of utilities before digging and to coordinate and cooperate fully with existing utility districts and companies.

Jod J Larley
DEVELOPERS APPROVAL

10/12/06
DATE

ENGINEER'S CERTIFICATION

The design improvements shown in this set of plans conform to the applicable editions of the Spokane County standards for road and sewer construction and Spokane County guidelines for stormwater management. I approve these plans for construction.

STANDARD NOTES FOR CONSTRUCTION

1) All work and materials shall be in conformance with the "SPOKANE COUNTY STANDARDS FOR ROAD AND SEWER CONSTRUCTION" 2001, and as amended.

2) Locations of existing utilities shown in the plans are approximate. The Contractor shall be responsible for locating all underground utilities. Any conflicting utilities shall be relocated prior to construction of road and drainage facilities.

3) The Contractor is required to have a complete set of the approved road and drainage plans on the job site whenever construction is in progress.

4) If the Contractor discovers any discrepancies between the plans and existing conditions encountered, the contractor shall immediately notify the Design Engineer and the Spokane Valley Engineers office.

5) Prior to site construction, the Contractor is responsible for locating underground utilities. Call the underground utility location service at 456-8000 before you dig.

6) The floor of a Grassed Percolation Area (GPA) swale includes the level portion of the floor of the swale, and the side slopes of the swale up to the GPA overflow elevation or top of drywell. The soil located in the floor of the GPA swale shall be a medium to well-draining material, with a minimum infiltration rate of 0.5 inches per hour. The Engineer shall provide a written statement which verifies that all GPA swales conform to this requirement. This written statement shall be submitted to the Spokane County Engineers office. prior to installing finished landscaping/sod and prior to final acceptance. The swale floor material shall be installed to a native soil stratum which also meets or exceeds this minimum percolation rate of 0.5 inches per hour.

DRYWELLS

DW No.	DW TYPE	METAL FRAME	METAL GRATE	STREET	STATION	OFFSET	TOP GRATE
DW #1	Type A	Type 4	Type 4	MOODY LANE	7+66	20' LT	1904.4
DW #2	Type A	Type 4	Type 4	MOODY LANE	5+66	20' LT	1902.8
DW #3	Type B	Type 4	Type 4	MOODY LANE	4+46	8.4' RT	1901.4
DW #4	Type A	Type 4	Type 4	MOODY LANE	5+83	20' RT	1902.9
DW #5	Type A	Type 4	Type 4	MOODY LANE	7+74	20' RT	1904.5
DW #6	Type A	Type 4	Type 4	PINEGLEN LN.	7+85	20' LT	1906.4
DW #7	Type A	Type 4	Type 4	PINEGLEN LN.	5+66	20' LT	1904.6
DW #8	Type B	Type 4	Type 4	PINEGLEN LN.	4+47	0' RT	1903.3
DW #9	Type A	Type 4	Type 4	PINEGLEN LN.	5+93	20' RT	1904.8
DW #10	Type A	Type 4	Type 4	PINEGLEN LN.	7+93	20' RT	1906.4

SPOKANE COUNTY ENGINEERS OFFICE
OFFICIAL PUBLIC DOCUMENT ORIGINAL
CONSTRUCTION PLANS
PROJECT #: P1956
DATE ACCEPTED: 10/16/06
ACCEPTANCE EXPIRES: 10/16/08
PROJECT LANE MILES PUBLIC: —
PROJECT LANE MILES PRIVATE: 0.17
CONSTRUCTION DOCUMENTATION AND CERTIFIED RECORD DRAWINGS, "AS-BUILTS" ARE REQUIRED PRIOR TO COUNTY ACCEPTANCE AND ESTABLISHMENT OF THE ROADS AND DRAINAGE FACILITIES FOR MAINTENANCE.
PERMIT REQUIRED
NOTIFY PERMIT ENGINEER [illegible] DAYS PRIOR TO CONSTRUCTION
REVISED

CURB INLETS

CI No.	TYPE	STREET	STATION	OFFSET	LENGTH	DEPTH	INVERT ELEVATION
CI 1	Type 1	MOODY LANE	7+61.14 to 7+65.14	12' LT	4'	6"	1904.61 to 1904.64
	Type 1	MOODY LANE	7+67.14 to 7+71.14	12' LT	4'	6"	1904.64 to 1904.69
CI 2	Type 1	MOODY LANE	5+61.14 to 5+65.14	12' LT	4'	6"	1903.00 to 1903.04
	Type 1	MOODY LANE	5+67.14 to 5+71.14	12' LT	4'	6"	1903.05 to 1903.10
CI 3	Type 1	MOODY LANE	Curb Stationing				
	Type 1	MOODY LANE	4+05.83 to 4+11.83	45' LT	6'	6"	1901.61 to 1901.61
CI 4	Type 1	MOODY LANE	5+77.63 to 5+81.63	12' RT	4'	6"	1903.14 to 1903.17
	Type 1	MOODY LANE	5+83.63 to 5+87.63	12' RT	4'	6"	1903.19 to 1903.22
CI 5	Type 1	MOODY LANE	7+68.73 to 7+72.73	12' RT	4'	6"	1904.67 to 1904.70
	Type 1	MOODY LANE	7+74.73 to 7+78.73	12' RT	4'	6"	1904.71 to 1904.75
CI 6	Type 1	PINEGLEN LN.	7+82.14 to 7+88.14	12' LT	6'	6"	1906.59 to 1906.64
CI 7	Type 1	PINEGLEN LN.	5+61.14 to 5+65.14	12' LT	4'	6"	1904.82 to 1904.86
	Type 1	PINEGLEN LN.	5+67.14 to 5+71.14	12' LT	4'	6"	1904.87 to 1904.91
CI 8	Type 1	PINEGLEN LN.	Curb Stationing				
	Type 1	PINEGLEN LN.	4+13 to 4+19	45' LT	6'	6"	1903.50 to 1903.50
CI 9	Type 1	PINEGLEN LN.	5+88 to 5+92	12 RT.	4'	6"	1905.04 to 1905.07
	Type 1	PINEGLEN LN.	5+94 to 5+98	12 RT.	4'	6"	1905.09 to 1905.12
CI 10	Type 1	PINEGLEN LN.	7+90 to 7+96	12 RT.	6'	6"	1906.66 to 1906.70

DRYLAND GRASS SEED MIX
Specifications per Spokane County

The bottom and side slopes of drainage swales/ditches are to be seeded with dryland grass seed mix and mulch.

Grass seed: Provide fresh, clean, new-crop seed complying with tolerance of purity and germination established by the Official Seed Analysis of North America. Provide seed mixture composed of grass species and percentages as follows:

10 percent	Elka Perennial Rye
20 percent	Durar Hard Fescue
45 percent	Covar Sheep Fescue
15 percent	Reubens Canadian Bluegrass

Provide mixture composed of grass seed and fertilizer in percentages as follows:

Grass Seed:	90 lbs. per acre
Fertilizer:	16-16-16 timed release composition, 300 lbs. per acre

All seed work is to be completed prior to September 15, or a temporary mulch shall be placed over the denuded surface, and the seeding occur the following spring, after April 15.

DRAINAGE LEGEND

- 2550 = Existing Ground Contour (Contour Interval = 1')
- = Drainage Basin Boundary
- = Runoff Flow Direction
- = Proposed Drywell, Spokane County Standards
- = Proposed Curb Inlet, Type 1 Spokane County Standards

TYPICAL SECTION: DRAINAGE SWALE

NOT TO SCALE

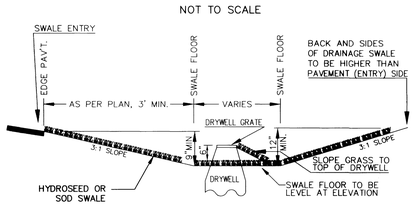

NOTE : Swale floor elevation on plan is top of sod.

NOTE : All drywells shall be installed with filter fabric (AMOCO #4545 or approved equal) between the drain rock and excavated lateral ground.

NOTE : To collect sediment, a 4'x4' (min.) piece of filter fabric shall be placed between the drywell ring and cover when the drywell is installed, then checked periodically and cleaned of sediment. Once grass has been established in the drainage swale, the fabric shall be removed.

CALL BEFORE YOU DIG 456-8000

BY	DATE	REVISIONS / AS BUILT

DATUM		SCALE			DATE
TBM NO.		HORIZONTAL	1"=50'	DRAWN M. C. PHILLIPS	JUN. 2006
ELEVATION	1882.93	VERTICAL		CHECKED KWM	8/25/06
LOCATION	USGS Brass Disk #M25 1931. NW corner of SR206 and the BNSF Railroad			APPROVED KWM	10/10/06

KEVIN W. McMILLAN STATE OF WASHINGTON 28576 REGISTERED PROFESSIONAL ENGINEER
EXPIRES 10/04/08

Founded 1946
Simpson Engineers, Inc.
CIVIL ENGINEERS & LAND SURVEYORS
N. 909 ARGONNE ROAD, SPOKANE WA., 99212-2789
PHONE (509) 926-1322 FAX (509) 926-1323

TYPE OF IMPROVEMENT: DRAINAGE	
PROJECT NUMBER	SHEET NUMBER
14876	3 OF 4

MOUNT VIEW ESTATES
NE 1/4 OF SECTION 34, T. 27 N, R. 43 E.W.M.

STORMWATER DRAINAGE PLAN

Revised P-1956 Eng Grad Drainage

P:\Projects\14501-15000\14876\dwg\14876.dwg 10/11/2006 09:02:39 AM PDT

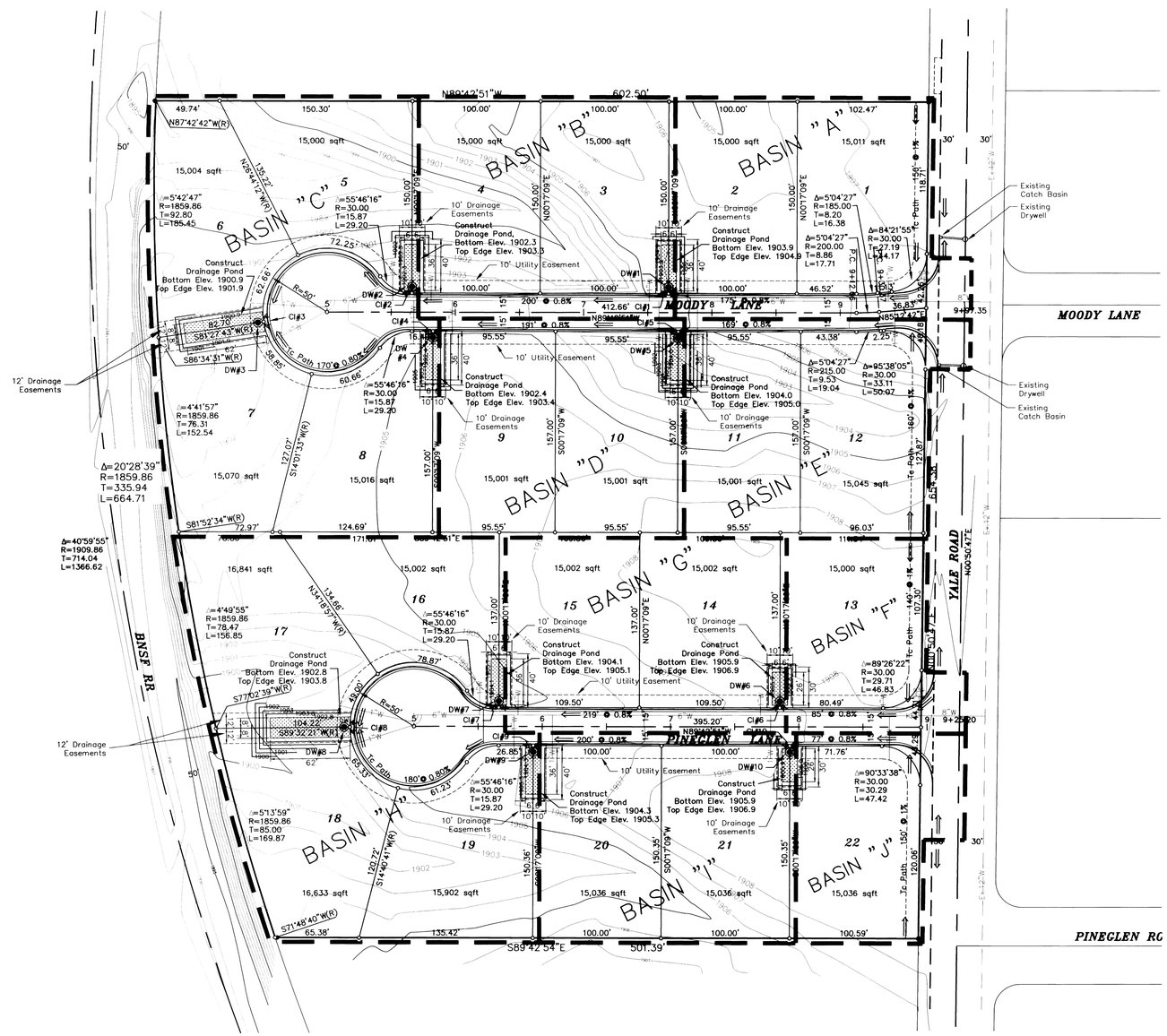

BM: USGS Brass Disk #M25 1931.
ELEV 1882.93 (NAVD 88)
NW corner of SR206 and the BNSF Railroad

CONTOUR INTERVAL: 5 FEET

NORTH

GRAPHIC SCALE (IN FEET)

0 25 50 100

SCALE: 1" = 50'

NOTE:
Exact locations, sizes and depths of underground utilities are not known. Underground utilities shown are taken from existing records and are shown for convenience of the contractor only. The Contractor is responsible to "Call Before You Dig 456-8000", and shall contact all utility owners and confirm locations of utilities before digging and to coordinate and cooperate fully with existing utility districts and companies.

Todd J. Lerley
DEVELOPERS APPROVAL

9/19/06
DATE

ENGINEER'S CERTIFICATION

The design improvements shown in this set of plans conform to the applicable editions of the Spokane County standards for road and sewer construction and Spokane County guidelines for stormwater management. I approve these plans for construction.

SPOKANE COUNTY ENGINEERS OFFICE
OFFICIAL PUBLIC DOCUMENT ORIGINAL
CONSTRUCTION PLANS
PROJECT #: P1956
DATE ACCEPTED: 9/20/06
ACCEPTANCE EXPIRES: 9/20/08
PROJECT LANE MILES PUBLIC:
PROJECT LANE MILES PRIVATE: 0.17
CONSTRUCTION DOCUMENTATION AND CERTIFIED RECORD DRAWINGS, "AS-BUILTS" ARE REQUIRED PRIOR TO COUNTY ACCEPTANCE AND ESTABLISHMENT OF THE ROADS AND DRAINAGE FACILITIES FOR MAINTENANCE.
PERMIT REQUIRED! (509) 477-3500
NOTIFY PERMIT ENGINEER 2 BUSINESS DAYS PRIOR TO CONSTRUCTION

STANDARD NOTES FOR CONSTRUCTION

1) All work and materials shall be in conformance with the "SPOKANE COUNTY STANDARDS FOR ROAD AND SEWER CONSTRUCTION" 2001, and as amended.

2) Locations of existing utilities shown in the plans are approximate. The Contractor shall be responsible for locating all underground utilities. Any conflicting utilities shall be relocated prior to construction of road and drainage facilities.

3) The Contractor is required to have a complete set of the approved road and drainage plans on the job site whenever construction is in progress.

4) If the Contractor discovers any discrepancies between the plans and existing conditions encountered, the contractor shall immediately notify the Design Engineer and the Spokane Valley Engineers office.

5) Prior to site construction, the Contractor is responsible for locating underground utilities. Call the underground utility location service at 456-8000 before you dig.

6) The floor of a Grassed Percolation Area (GPA) swale includes the level portion of the floor of the swale, and the side slopes of the swale up to the GPA overflow elevation or top of drywell. The soil located in the floor of the GPA swale shall be a medium to well-draining material, with a minimum infiltration rate of 0.5 inches per hour. The Engineer shall provide a written statement which verifies that all GPA swales conform to this requirement. This written statement shall be submitted to the Spokane County Engineers office. prior to installing finished landscaping/sod and prior to final acceptance. The swale floor material shall be installed to a native soil stratum which also meets or exceeds this minimum percolation rate of 0.5 inches per hour.

DRYWELLS

DW No.	DW TYPE	METAL FRAME	METAL GRATE	STREET	STATION	OFFSET	TOP GRATE
DW #1	Type A	Type 4	Type 4	MOODY LANE	7+66	20' LT	1904.4
DW #2	Type A	Type 4	Type 4	MOODY LANE	5+66	20' LT	1902.8
DW #3	Type B	Type 4	Type 4	MOODY LANE	4+46	8.4' RT	1901.4
DW #4	Type A	Type 4	Type 4	MOODY LANE	5+83	20' RT	1902.9
DW #5	Type A	Type 4	Type 4	MOODY LANE	7+74	20' RT	1904.5
DW #6	Type A	Type 4	Type 4	PINEGLEN LN.	7+85	20' LT	1906.4
DW #7	Type A	Type 4	Type 4	PINEGLEN LN.	5+66	20' LT	1904.6
DW #8	Type B	Type 4	Type 4	PINEGLEN LN.	4+47	0' RT	1903.3
DW #9	Type A	Type 4	Type 4	PINEGLEN LN.	5+93	20' RT	1904.8
DW #10	Type A	Type 4	Type 4	PINEGLEN LN.	7+93	20' RT	1906.4

CURB INLETS

CI No.	TYPE	STREET	STATION	OFFSET	LENGTH	DEPTH	INVERT ELEVATION
CI 1	Type 1	MOODY LANE	7+61.14 to 7+65.14	12' LT	4'	6"	1904.61 to 1904.64
	Type 1	MOODY LANE	7+67.14 to 7+71.14	12' LT	4'	6"	1904.64 to 1904.69
CI 2	Type 1	MOODY LANE	5+61.14 to 5+65.14	12' LT	4'	6"	1903.00 to 1903.04
	Type 1	MOODY LANE	5+67.14 to 5+71.14	12' LT	4'	6"	1903.05 to 1903.10
CI 3	Type 1	MOODY LANE	Curb Stationing				
	Type 1	MOODY LANE	4+05.83 to 4+11.83	45' LT	6'	6"	1901.61 to 1901.61
CI 4	Type 1	MOODY LANE	5+77.63 to 5+81.63	12' RT	4'	6"	1903.14 to 1903.17
	Type 1	MOODY LANE	5+83.63 to 5+87.63	12' RT	4'	6"	1903.19 to 1903.22
CI 5	Type 1	MOODY LANE	7+68.73 to 7+72.73	12' RT	4'	6"	1904.67 to 1904.70
	Type 1	MOODY LANE	7+74.73 to 7+78.73	12' RT	4'	6"	1904.71 to 1904.75
CI 6	Type 1	PINEGLEN LN.	7+82.14 to 7+88.14	12' LT	6'	6"	1906.59 to 1906.64
CI 7	Type 1	PINEGLEN LN.	5+61.14 to 5+65.14	12' LT	4'	6"	1904.82 to 1904.86
	Type 1	PINEGLEN LN.	5+67.14 to 5+71.14	12' LT	4'	6"	1904.87 to 1904.91
CI 8	Type 1	PINEGLEN LN.	Curb Stationing				
	Type 1	PINEGLEN LN.	4+13 to 4+19	45' LT	6'	6"	1903.50 to 1903.50
CI 9	Type 1	PINEGLEN LN.	5+88 to 5+92	12 RT.	4'	6"	1905.04 to 1905.07
	Type 1	PINEGLEN LN.	5+94 to 5+98	12 RT.	4'	6"	1905.09 to 1905.12
CI 10	Type 1	PINEGLEN LN.	7+90 to 7+96	12 RT.	6'	6"	1906.66 to 1906.70

DRYLAND GRASS SEED MIX

Specifications per Spokane County

The bottom and side slopes of drainage swales/ditches are to be seeded with dryland grass seed mix and mulch.

Grass seed: Provide fresh, clean, new-crop seed complying with tolerance of purity and germination established by the Official Seed Analysis of North America. Provide seed mixture composed of grass species and percentages as follows:

10 percent	Elka Perennial Rye
20 percent	Durar Hard Fescue
45 percent	Covar Sheep Fescue
15 percent	Reubens Canadian Bluegrass

Provide mixture composed of grass seed and fertilizer in percentages as follows:

Grass Seed:	90 lbs. per acre
Fertilizer:	16-16-16 timed release composition, 300 lbs. per acre

All seed work is to be completed prior to September 15, or a temporary mulch shall be placed over the denuded surface, and the seeding occur the following spring, after April 15.

DRAINAGE LEGEND

- 2550 = Existing Ground Contour (Contour Interval = 1')
- = Drainage Basin Boundary
- = Runoff Flow Direction
- = Proposed Drywell, Spokane County Standards
- = Proposed Curb Inlet, Type 1 Spokane County Standards

TYPICAL SECTION: DRAINAGE SWALE

NOT TO SCALE

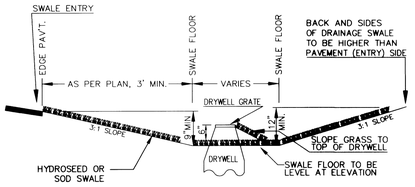

NOTE : Swale floor elevation on plan is top of sod.

NOTE : All drywells shall be installed with filter fabric (AMOCO #4545 or approved equal) between the drain rock and excavated lateral ground.

NOTE : To collect sediment, a 4'x4' (min.) piece of filter fabric shall be placed between the drywell ring and cover when the drywell is installed, then checked periodically and cleaned of sediment. Once grass has been established in the drainage swale, the fabric shall be removed.

CALL BEFORE YOU DIG 456-8000

BY	DATE	REVISIONS / AS BUILT

DATUM		SCALE			DATE
TBM NO.		HORIZONTAL	1"=50'	DRAWN M. C. PHILLIPS	JUN. 2006
ELEVATION	1882.93	VERTICAL		CHECKED KWM	8/25/06
LOCATION	USGS Brass Disk #M25 1931. NW corner of SR206 and the BNSF Railroad			APPROVED KWM	8/25/06

STATE OF WASHINGTON — KEVIN W. McMILLIN — 28670 — REGISTERED PROFESSIONAL ENGINEER
EXPIRES 10/04/06

Founded 1946
Simpson Engineers, Inc.
CIVIL ENGINEERS & LAND SURVEYORS
N. 909 ARGONNE ROAD, SPOKANE WA., 99212-2789
PHONE (509) 926-1322 FAX (509) 926-1323

TYPE OF IMPROVEMENT: DRAINAGE

PROJECT NUMBER	SHEET NUMBER
14876	3 OF 4

MOUNT VIEW ESTATES
NE 1/4 OF SECTION 34, T. 27 N, R. 43 E.W.M.

STORMWATER DRAINAGE PLAN

P:\Projects\14501-15000\14876\dwg\14876.dwg 8/29/2006 6:47:55 AM PST

P 1956 Eng Road Drainage

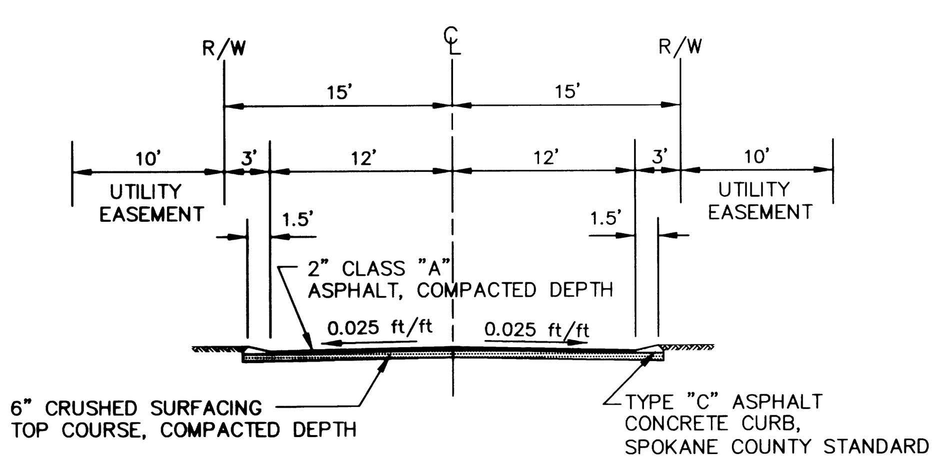

TYPICAL PRIVATE ROAD SECTION

NOT TO SCALE

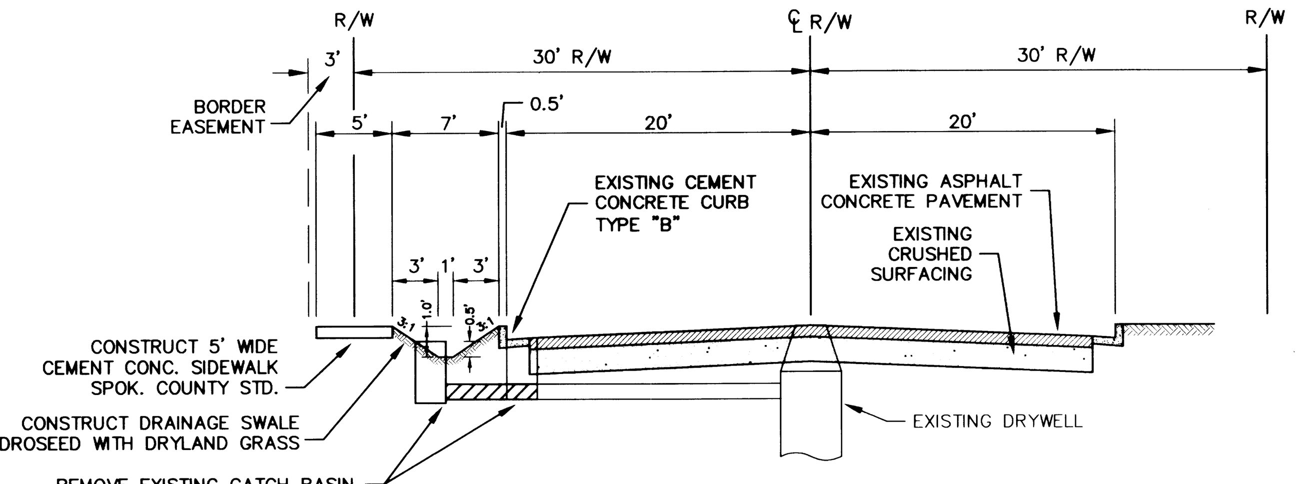

ROAD SECTION: YALE ROAD

(LOOKING NORTH)

NOT TO SCALE

CURB INLETS							
CI No.	TYPE	STREET	STATION	OFFSET	LENGTH	DEPTH	INVERT ELEVATION
CI 1	Type 1	MOODY LANE	7+61.14 to 7+65.14	12' LT	4'	6"	1904.61 to 1904.64
	Type 1	MOODY LANE	7+67.14 to 7+71.14	12' LT	4'	6"	1904.64 to 1904.69
CI 2	Type 1	MOODY LANE	5+61.14 to 5+65.14	12' LT	4'	6"	1903.00 to 1903.04
	Type 1	MOODY LANE	5+67.14 to 5+71.14	12' LT	4'	6"	1903.05 to 1903.10
CI 3	Type 1	MOODY LANE	Curb Stationing				
	Type 1	MOODY LANE	4+05.83 to 4+11.83	45' LT	6'	6"	1901.61 to 1901.61
CI 4	Type 1	MOODY LANE	5+77.63 to 5+81.63	12' RT	4'	6"	1903.14 to 1903.17
	Type 1	MOODY LANE	5+83.63 to 5+87.63	12' RT	4'	6"	1903.19 to 1903.22
CI 5	Type 1	MOODY LANE	7+68.73 to 7+72.73	12' RT	4'	6"	1904.67 to 1904.70
	Type 1	MOODY LANE	7+74.73 to 7+78.73	12' RT	4'	6"	1904.71 to 1904.75
CI 6	Type 1	PINEGLEN LN.	7+82.14 to 7+88.14	12' LT	6'	6"	1906.59 to 1906.64
CI 7	Type 1	PINEGLEN LN.	5+61.14 to 5+65.14	12' LT	4'	6"	1904.82 to 1904.86
	Type 1	PINEGLEN LN.	5+67.14 to 5+71.14	12' LT	4'	6"	1904.87 to 1904.91

CURB INLETS							
CI No.	TYPE	STREET	STATION	OFFSET	LENGTH	DEPTH	INVERT ELEVATION
CI 8	Type 1	PINEGLEN LN.	Curb Stationing				
	Type 1	PINEGLEN LN.	4+13 to 4+19	45' LT	6'	6"	1903.50 to 1903.50
CI 9	Type 1	PINEGLEN LN.	5+88 to 5+92	12 RT.	4'	6"	1905.04 to 1905.07
	Type 1	PINEGLEN LN.	5+94 to 5+98	12 RT.	4'	6"	1905.09 to 1905.12
CI 10	Type 1	PINEGLEN LN.	7+90 to 7+96	12 RT.	6'	6"	1906.66 to 1906.70

DRYWELLS							
DW No.	DW TYPE	METAL FRAME	METAL GRATE	STREET	STATION	OFFSET	TOP GRATE
DW #1	Type A	Type 4	Type 4	MOODY LANE	7+66	20' LT	1904.4
DW #2	Type A	Type 4	Type 4	MOODY LANE	5+66	20' LT	1902.8
DW #3	Type B	Type 4	Type 4	MOODY LANE	4+46	8.4' RT	1901.4
DW #4	Type A	Type 4	Type 4	MOODY LANE	5+83	20' RT	1902.9
DW #5	Type A	Type 4	Type 4	MOODY LANE	7+74	20' RT	1904.5
DW #6	Type A	Type 4	Type 4	PINEGLEN LN.	7+85	20' LT	1906.4
DW #7	Type A	Type 4	Type 4	PINEGLEN LN.	5+66	20' LT	1904.6
DW #8	Type B	Type 4	Type 4	PINEGLEN LN.	4+47	0' RT	1903.3
DW #9	Type A	Type 4	Type 4	PINEGLEN LN.	5+93	20' RT	1904.8
DW #10	Type A	Type 4	Type 4	PINEGLEN LN.	7+93	20' RT	1906.4

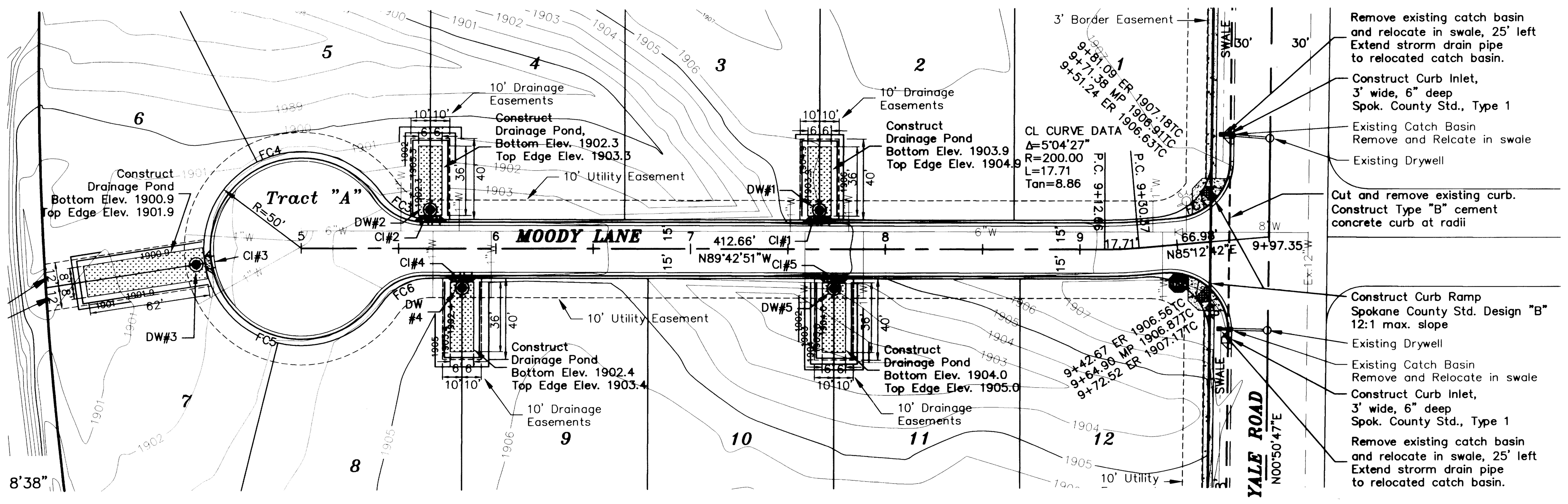

MOODY LANE

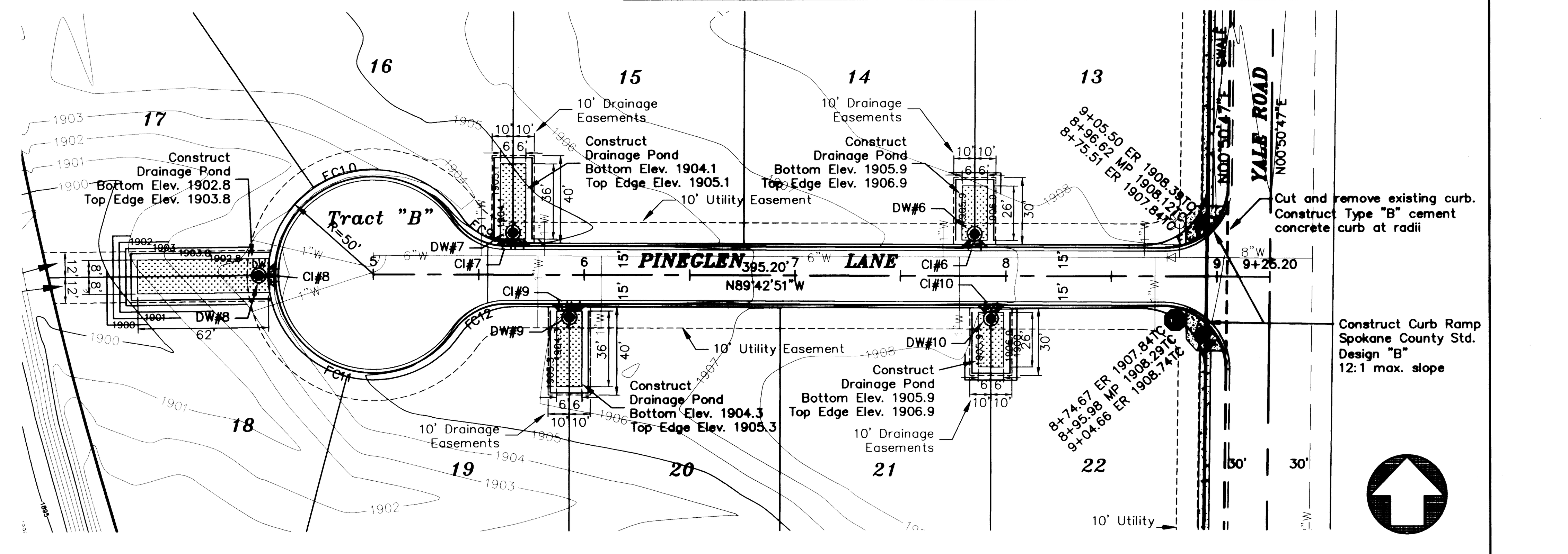

PINEGLEN LANE

FACE OF CURB CURVE TABLE				
CURVE	LENGTH	RADIUS	DELTA	TANGENT
FC1	44.18	30.00	84°22'23"	27.19
FC2	50.07	30.00	95°37'37"	33.10
FC3	28.98	30.00	55°20'44"	15.73
FC4	125.12	46.50	154°10'10"	202.78
FC5	110.80	46.50	136°31'18"	116.62
FC6	28.98	30.00	55°20'44"	15.73

FACE OF CURB CURVE TABLE				
CURVE	LENGTH	RADIUS	DELTA	TANGENT
FC7	46.83	30.00	89°26'50"	29.71
FC8	47.41	30.00	90°33'10"	30.29
FC9	28.98	30.00	55°20'44"	15.73
FC10	117.96	46.50	145°20'44"	149.04
FC11	117.96	46.50	145°20'44"	149.04
FC12	28.98	30.00	55°20'44"	15.73

SPOKANE COUNTY ENGINEERS OFFICE
OFFICIAL PUBLIC DOCUMENT ORIGINAL
CONSTRUCTION PLANS
PROJECT #: P1956
DATE ACCEPTED: 10/16/06
ACCEPTANCE EXPIRES: 10/16/08
PROJECT LANE MILES PUBLIC: —
PROJECT LANE MILES PRIVATE: 0.17
CONSTRUCTION DOCUMENTATION AND CERTIFIED RECORD DRAWINGS, "AS-BUILTS" ARE REQUIRED PRIOR TO COUNTY ACCEPTANCE AND ESTABLISHMENT OF THE ROADS AND DRAINAGE FACILITIES FOR MAINTENANCE.
PERMIT REQUIRED! (509) 477-3600
NOTIFY PERMIT ENGINEER 2 BUSINESS DAYS PRIOR TO CONSTRUCTION
REVISED

● = Stop & Steet Name Sign: Spokane County Standards

All signs shall be located as specified in the Manual of Uniform Traffic Control Devices.

Street signs shall be installed after the installation of the curb and pavement.

Tod J Lurly — DEVELOPERS APPROVAL — DATE 10/12/06

DATUM		SCALE			DATE
TBM NO.		HORIZONTAL 1"=50'		DRAWN M. C. PHILLIPS	JUN. 2006
ELEVATION	1882.93	VERTICAL		CHECKED KWM	8/25/06
LOCATION	USGS Brass Disk #M25 1931. NW corner of SR206 and the BNSF Railroad			APPROVED KWM	10/10/06

BY	DATE	REVISIONS / AS BUILT

KEVIN W. McMULKIN — STATE OF WASHINGTON — 28578 REGISTERED PROFESSIONAL ENGINEER — 10/10/06 — EXPIRES 10/04/08

Founded 1946
Simpson Engineers, Inc.
CIVIL ENGINEERS & LAND SURVEYORS
N. 909 ARGONNE ROAD, SPOKANE WA., 99212-2789
PHONE (509) 926-1322 FAX (509) 926-1323

TYPE OF IMPROVEMENT: STREET

PROJECT NUMBER: 14876 — SHEET NUMBER: 4 OF 4

MOUNT VIEW ESTATES

STREET PLAN AND PROFILE

MOODY LANE; Sta. 5+00 to 9+97.35
PINEGLEN LANE; Sta. 5+00 to 9+25.2

THE NE 1/4 OF SEC.34, T27N, R43 EWM

CALL BEFORE YOU DIG 456-8000

Revised P1956 Eng Road Drainage

P:\Projects\14501-15000\14876\dwg\14876.dwg 10/11/2006 09:02:39 AM PDT

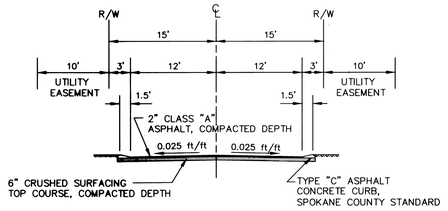

TYPICAL PRIVATE ROAD SECTION

NOT TO SCALE

CURB INLETS

CI No.	TYPE	STREET	STATION	OFFSET	LENGTH	DEPTH	INVERT ELEVATION
CI 1	Type 1	MOODY LANE	7+61.14 to 7+65.14	12' LT	4'	6"	1904.61 to 1904.64
	Type 1	MOODY LANE	7+67.14 to 7+71.14	12' LT	4'	6"	1904.64 to 1904.69
CI 2	Type 1	MOODY LANE	5+61.14 to 5+65.14	12' LT	4'	6"	1903.00 to 1903.04
	Type 1	MOODY LANE	5+67.14 to 5+71.14	12' LT	4'	6"	1903.05 to 1903.10
CI 3	Type 1	MOODY LANE	Curb Stationing				
	Type 1	MOODY LANE	4+05.83 to 4+11.83	45' LT	6'	6"	1901.61 to 1901.61
CI 4	Type 1	MOODY LANE	5+77.63 to 5+81.63	12' RT	4'	6"	1903.14 to 1903.17
	Type 1	MOODY LANE	5+83.63 to 5+87.63	12' RT	4'	6"	1903.19 to 1903.22
CI 5	Type 1	MOODY LANE	7+68.73 to 7+72.73	12' RT	4'	6"	1904.67 to 1904.70
	Type 1	MOODY LANE	7+74.73 to 7+78.73	12' RT	4'	6"	1904.71 to 1904.75
CI 6	Type 1	PINEGLEN LN.	7+82.14 to 7+88.14	12' LT	6'	6"	1906.59 to 1906.64
CI 7	Type 1	PINEGLEN LN.	5+61.14 to 5+65.14	12' LT	4'	6"	1904.82 to 1904.86
	Type 1	PINEGLEN LN.	5+67.14 to 5+71.14	12' LT	4'	6"	1904.87 to 1904.91

CURB INLETS

CI No.	TYPE	STREET	STATION	OFFSET	LENGTH	DEPTH	INVERT ELEVATION
CI 8	Type 1	PINEGLEN LN.	Curb Stationing				
	Type 1	PINEGLEN LN.	4+13 to 4+19	45' LT	6'	6"	1903.50 to 1903.50
CI 9	Type 1	PINEGLEN LN.	5+88 to 5+92	12 RT.	4'	6"	1905.04 to 1905.07
	Type 1	PINEGLEN LN.	5+94 to 5+98	12 RT.	4'	6"	1905.09 to 1905.12
CI 10	Type 1	PINEGLEN LN.	7+90 to 7+96	12 RT.	6'	6"	1906.66 to 1906.70

FACE OF CURB CURVE TABLE

CURVE	LENGTH	RADIUS	DELTA	TANGENT
FC1	44.18	30.00	84°22'23"	27.19
FC2	50.07	30.00	95°37'37"	33.10
FC3	28.98	30.00	55°20'44"	15.73
FC4	125.12	46.50	154°10'10"	202.78
FC5	110.80	46.50	136°31'18"	116.62
FC6	28.98	30.00	55°20'44"	15.73

FACE OF CURB CURVE TABLE

CURVE	LENGTH	RADIUS	DELTA	TANGENT
FC7	46.83	30.00	89°26'50"	29.71
FC8	47.41	30.00	90°33'10"	30.29
FC9	28.98	30.00	55°20'44"	15.73
FC10	117.96	46.50	145°20'44"	149.04
FC11	117.96	46.50	145°20'44"	149.04
FC12	28.98	30.00	55°20'44"	15.73

DRYWELLS

DW No.	DW TYPE	METAL FRAME	METAL GRATE	STREET	STATION	OFFSET	TOP GRATE
DW #1	Type A	Type 4	Type 4	MOODY LANE	7+66	20' LT	1904.4
DW #2	Type A	Type 4	Type 4	MOODY LANE	5+66	20' LT	1902.8
DW #3	Type B	Type 4	Type 4	MOODY LANE	4+46	8.4' RT	1901.4
DW #4	Type A	Type 4	Type 4	MOODY LANE	5+83	20' RT	1902.9
DW #5	Type A	Type 4	Type 4	MOODY LANE	7+74	20' RT	1904.5
DW #6	Type A	Type 4	Type 4	PINEGLEN LN.	7+85	20' LT	1906.4
DW #7	Type A	Type 4	Type 4	PINEGLEN LN.	5+66	20' LT	1904.6
DW #8	Type B	Type 4	Type 4	PINEGLEN LN.	4+47	0' RT	1903.3
DW #9	Type A	Type 4	Type 4	PINEGLEN LN.	5+93	20' RT	1904.8
DW #10	Type A	Type 4	Type 4	PINEGLEN LN.	7+93	20' RT	1906.4

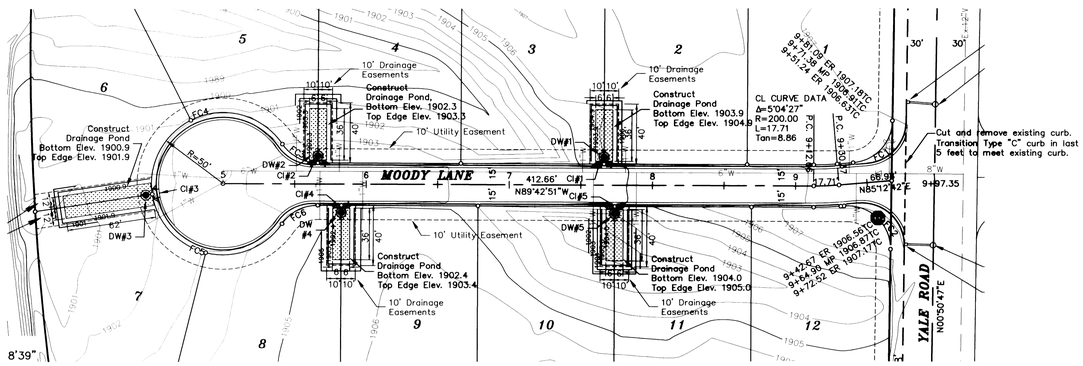

MOODY LANE

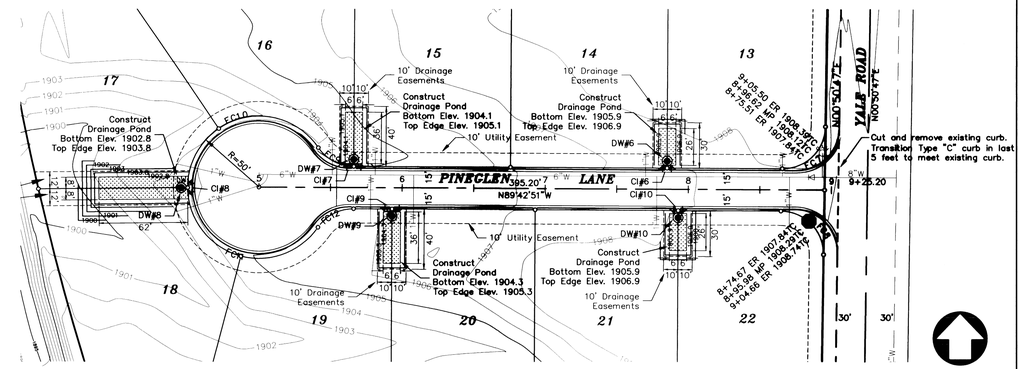

PINEGLEN LANE

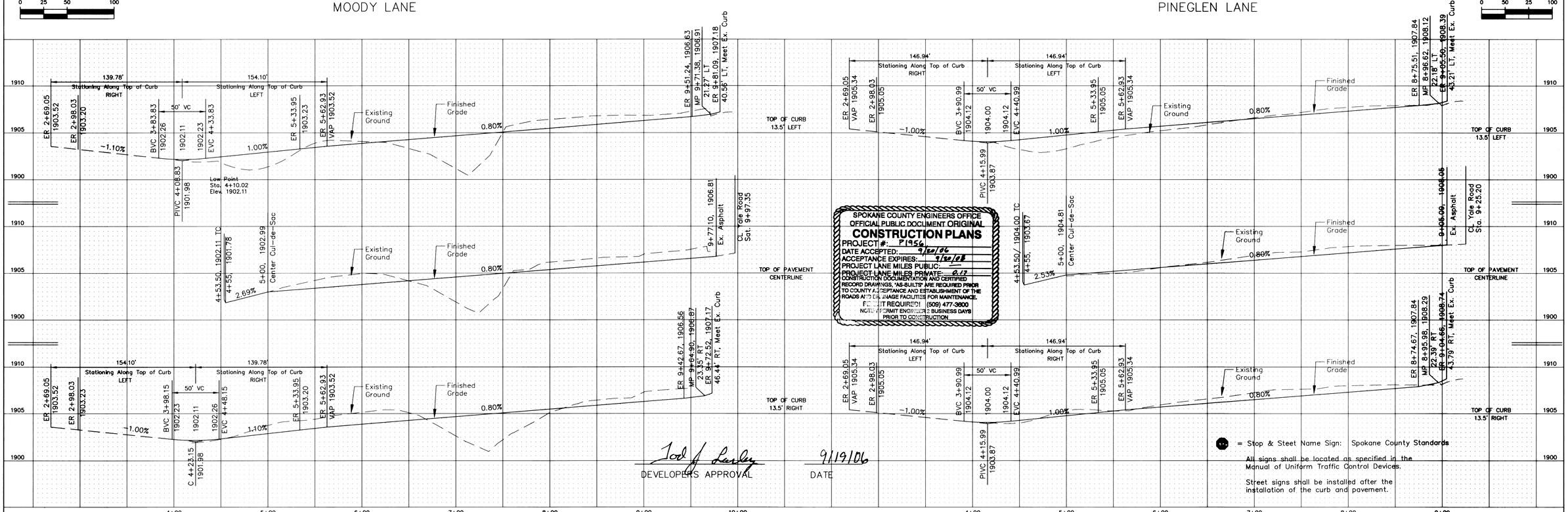

SPOKANE COUNTY ENGINEERS OFFICE
OFFICIAL PUBLIC DOCUMENT ORIGINAL
CONSTRUCTION PLANS
PROJECT #: P1956
DATE ACCEPTED: 9/20/06
ACCEPTANCE EXPIRES: 9/20/08
PROJECT LANE MILES PUBLIC: —
PROJECT LANE MILES PRIVATE: 0.13
CONSTRUCTION DOCUMENTATION AND CERTIFIED RECORD DRAWINGS, "AS-BUILTS" ARE REQUIRED PRIOR TO COUNTY ACCEPTANCE AND ESTABLISHMENT OF THE ROADS AND DRAINAGE FACILITIES FOR MAINTENANCE.
PERMIT REQUIRED! (509) 477-3600
NOTIFY PERMIT ENGINEER 2 BUSINESS DAYS PRIOR TO CONSTRUCTION.

Jed J. Lawley — DEVELOPERS APPROVAL

9/19/06 — DATE

● = Stop & Steet Name Sign: Spokane County Standards

All signs shall be located as specified in the Manual of Uniform Traffic Control Devices.

Street signs shall be installed after the installation of the curb and pavement.

BY	DATE	REVISIONS / AS BUILT

DATUM		SCALE			DATE
TBM NO.		HORIZONTAL	1"=50'	DRAWN M. C. PHILLIPS	JUN. 2006
ELEVATION	1882.93	VERTICAL		CHECKED KWM	8/25/06
LOCATION	USGS Brass Disk #M25 1931. NW corner of SR206 and the BNSF Railroad			APPROVED KWM	8/25/06

KEVIN W. McMILLIN — STATE OF WASHINGTON — 18870 — REGISTERED PROFESSIONAL ENGINEER — EXPIRES 10/04/06

Founded 1946
Simpson Engineers, Inc.
CIVIL ENGINEERS & LAND SURVEYORS
N. 909 ARGONNE ROAD, SPOKANE WA., 99212-2789
PHONE (509) 926-1322 FAX (509) 926-1323

TYPE OF IMPROVEMENT: STREET

PROJECT NUMBER	SHEET NUMBER
14876	4 OF 4

MOUNT VIEW ESTATES

STREET PLAN AND PROFILE

MOODY LANE; Sta. 5+00 to 9+97.35
PINEGLEN LANE; Sta. 5+00 to 9+25.2

THE NE 1/4 OF SEC.34, T27N, R43 EWM

P:\Projects\14501-15000\14876\dwg\14876.dwg 8/29/2006 6:47:55 AM PST

P-1956 England Drainage

CALL BEFORE YOU DIG 456-8000