STREET AND DRAINAGE PLANS
MICA VIEW MEADOWS
SPOKANE COUNTY, WASHINGTON
N 1/2 OF THE N 1/2 OF THE NE. 1/4 S. 20, T. 25 N., R. 45 E., W.M.

20551

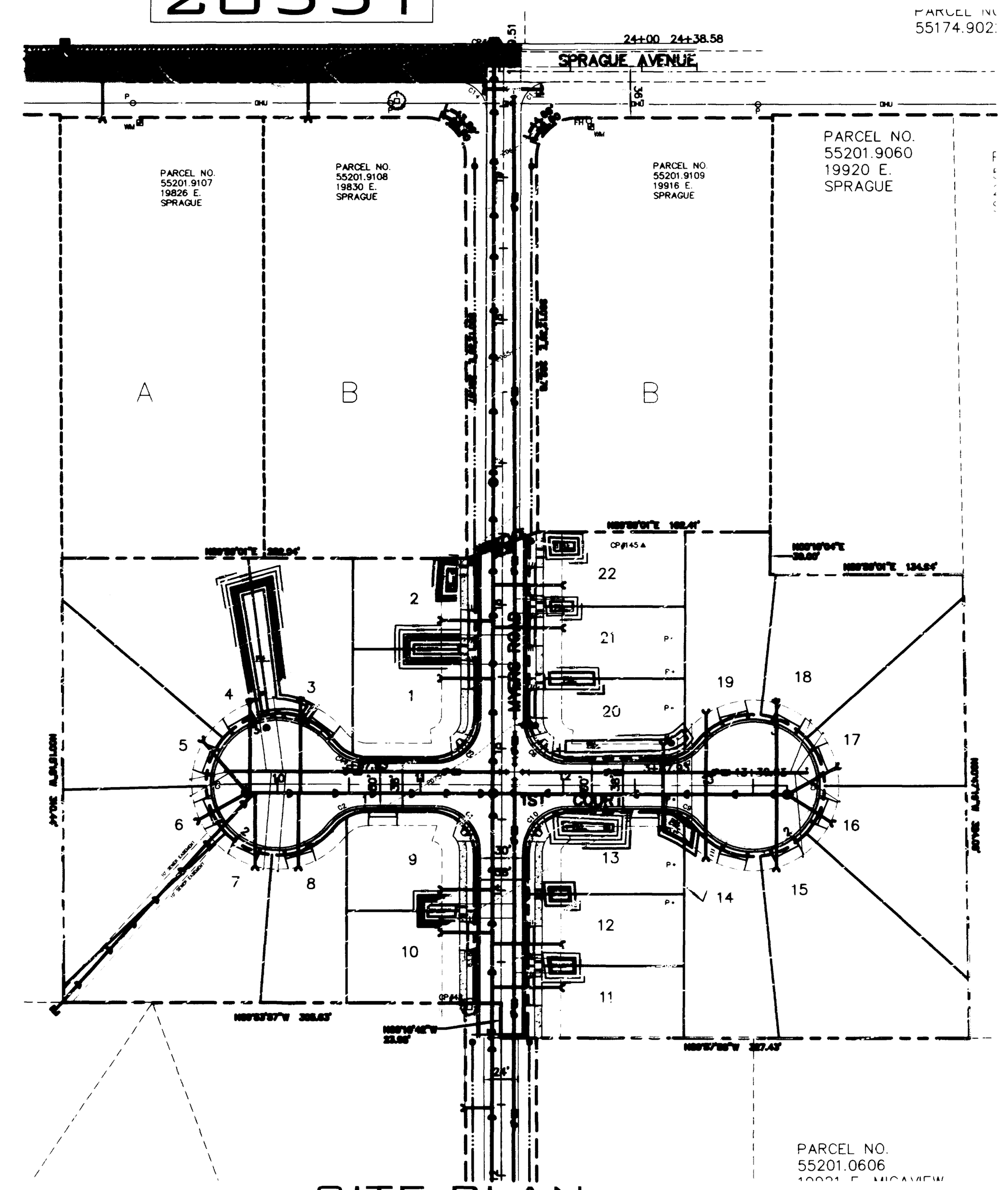

SITE PLAN

SCALE: 1"=100'

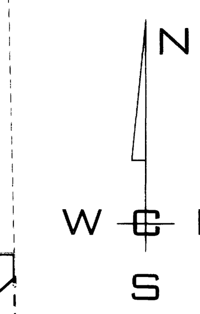

UNDERGROUND SERVICE ALERT
ONE-CALL NUMBER
456·8000
CALL TWO BUSINESS DAYS BEFORE YOU DIG

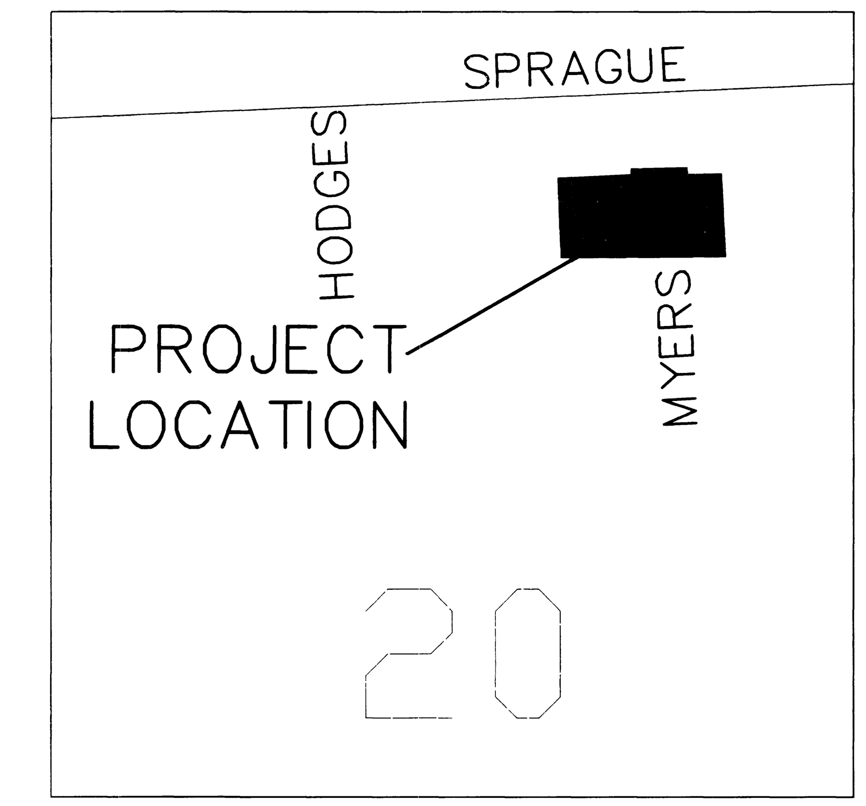

VICINITY MAP

NOT TO SCALE

GENERAL NOTES

1. ALL MATERIALS, WORKMANSHIP, AND CONSTRUCTION OF SITE IMPROVEMENTS SHALL MEET OR EXCEED SITE WORK STANDARDS AND THE STANDARDS AND SPECIFICATIONS SET FORTH IN THE **SPOKANE COUNTY** REGULATIONS AND APPLICABLE STATE AND FEDERAL REGULATIONS. WHERE THERE IS CONFLICT BETWEEN THESE PLANS AND THE SPECIFICATIONS, OR ANY APPLICABLE STANDARDS, THE HIGHER QUALITY STANDARD SHALL APPLY. ALL WORK WITHIN PUBLIC R.O.W. OR EASEMENTS SHALL BE INSPECTED AND APPROVED BY THE **SPOKANE COUNTY** INSPECTOR. INSPECTION SERVICES AND CONSTRUCTION CERTIFICATION TO BE PROVIDED BY DESIGNEE OF PROJECT SPONSOR/OWNER.

2. THE CONTRACTOR IS SPECIFICALLY CAUTIONED THAT THE LOCATION AND/OR ELEVATION OF EXISTING UTILITIES, AS SHOWN ON THESE PLANS, IS BASED ON RECORDS OF THE VARIOUS UTILITY COMPANIES AND, WHERE POSSIBLE, MEASUREMENTS TAKEN IN THE FIELD. THE INFORMATION IS NOT TO BE RELIED UPON AS BEING EXACT OR COMPLETE. THE CONTRACTOR MUST CALL THE LOCAL UTILITY LOCATION CENTER AT LEAST 48 HOURS BEFORE ANY EXCAVATION TO REQUEST EXACT FIELD LOCATIONS OF EXISTING UTILITIES. THE CONTRACTOR SHALL VERIFY PERTINENT LOCATIONS AND ELEVATIONS, ESPECIALLY AT THE CONNECTION POINTS AND AT POTENTIAL UTILITY CONFLICTS. IT SHALL BE THE RESPONSIBILITY OF THE CONTRACTOR TO RELOCATE ALL EXISTING UTILITIES THAT CONFLICT WITH THE PROPOSED IMPROVEMENTS SHOWN ON THESE PLANS.

3. THE CONTRACTOR SHALL BE RESPONSIBLE FOR OBTAINING ALL NECESSARY PERMITS FROM ALL APPLICABLE AGENCIES. THE CONTRACTOR SHALL NOTIFY THE **SPOKANE COUNTY** INSPECTOR AT LEAST 48 HOURS PRIOR TO THE START OF ANY EARTH DISTURBING ACTIVITY OR CONSTRUCTION ON ANY AND ALL PUBLIC IMPROVEMENTS.

4. THE CONTRACTOR SHALL COORDINATE AND COOPERATE WITH **SPOKANE COUNTY** AND ALL UTILITY COMPANIES WITH REGARD TO RELOCATIONS OR ADJUSTMENTS OF EXISTING UTILITIES DURING CONSTRUCTION AND TO ASSURE THAT THE WORK IS ACCOMPLISHED IN A TIMELY FASHION AND WITH A MINIMUM DISRUPTION OF SERVICE. THE CONTRACTOR SHALL BE RESPONSIBLE FOR CONTACTING ALL PARTIES AFFECTED BY ANY DISRUPTION OF ANY UTILITY SERVICE.

5. THE CONTRACTOR SHALL HAVE ONE (1) SIGNED COPY OF THE APPROVED PLANS, ONE (1) COPY OF THE APPROPRIATE STANDARDS AND SPECIFICATIONS, AND A COPY OF ANY PERMITS AND EXTENSION AGREEMENTS NEEDED FOR THE JOB ON-SITE AT ALL TIMES.

6. THE CONTRACTOR SHALL BE RESPONSIBLE FOR ALL ASPECTS OF SAFETY INCLUDING, BUT NOT LIMITED TO, EXCAVATION, TRENCHING, SHORING, TRAFFIC CONTROL, AND SECURITY.

7. IF, DURING THE CONSTRUCTION PROCESS, CONDITIONS ARE ENCOUNTERED BY THE CONTRACTOR, HIS SUBCONTRACTORS, OR OTHER AFFECTED PARTIES, WHICH COULD INDICATE A SITUATION THAT IS NOT IDENTIFIED IN THE PLANS OR SPECIFICATIONS, THE CONTRACTOR SHALL CONTACT THE ENGINEER IMMEDIATELY.

8. ALL REFERENCES TO ANY PUBLISHED STANDARDS SHALL REFER TO THE LATEST REVISION OF SAID STANDARD, UNLESS SPECIFICALLY STATED OTHERWISE.

9. FOR WORK AFFECTING PUBLIC ROADWAYS OR IF REQUIRED BY AND THE SPOKANE COUNTY THE CONTRACTOR SHALL SUBMIT A TRAFFIC CONTROL AND PHASING PLAN, IN ACCORDANCE WITH M.U.T.C.D. FOR APPROVAL PRIOR TO ANY CONSTRUCTION ACTIVITIES WITHIN OR AFFECTING THE RIGHT-OF-WAY, THE CONTRACTOR SHALL BE RESPONSIBLE FOR PROVIDING ANY AND ALL TRAFFIC CONTROL DEVICES AS MAY BE REQUIRED BY SAID PLANS. PRIOR TO INSTALLATION AND PRECONSTRUCTION CONFERENCE SHALL BE HELD WITH **SPOKANE COUNTY**.

10. THE CONTRACTOR IS RESPONSIBLE FOR PROVIDING ALL LABOR AND MATERIALS NECESSARY FOR THE COMPLETION OF THE INTENDED IMPROVEMENTS SHOWN ON THESE DRAWINGS OR DESIGNATED TO BE PROVIDED, INSTALLED, CONSTRUCTED, REMOVED OR RELOCATED UNLESS SPECIFICALLY NOTED OTHERWISE.

11. PER AGENCY STANDARDS THE CONTRACTOR SHALL BE RESPONSIBLE FOR KEEPING ROADWAYS FREE AND CLEAR OF ALL CONSTRUCTION DEBRIS AND DIRT TRACKED FROM THE SITE.

12. THE CONTRACTOR SHALL BE RESPONSIBLE FOR RECORDING RECORD INFORMATION ON A SET OF RECORD DRAWINGS KEPT AT THE CONSTRUCTION SITE AND AVAILABLE TO THE AND THE **SPOKANE COUNTY** INSPECTOR AT ALL TIMES.

13. DIMENSIONS FOR LAYOUT AND CONSTRUCTION ARE NOT TO BE SCALED FROM ANY DRAWING. FOR ADDITIONAL INFORMATION CONTACT THE ENGINEER FOR CLARIFICATION AND NOTE ON THE RECORD DRAWINGS.

14. ALL EROSION AND SEDIMENT CONTROL (E.S.C.) MEASURES SHALL BE INSTALLED AT THE LIMITS OF CONSTRUCTION PRIOR TO GROUND-DISTURBING ACTIVITY. ALL E.S.C. MEASURES SHALL BE MAINTAINED IN GOOD REPAIR BY THE CONTRACTOR UNTIL SUCH TIME AS THE ENTIRE DISTURBED AREAS ARE STABILIZED WITH HARD SURFACE OR LANDSCAPING.

15. THE CONTRACTOR SHALL SEQUENCE INSTALLATION OF UTILITIES IN SUCH A MANNER AS TO MINIMIZE POTENTIAL UTILITY CONFLICTS. IN GENERAL, STORM SEWER AND SANITARY SEWER SHOULD BE CONSTRUCTED PRIOR TO INSTALLATION OF WATER LINES AND DRY UTILITIES. IT IS THE RESPONSIBILITY OF THE CONTRACTOR TO COORDINATE ALL UTILITY RELOCATIONS CONSISTENT WITH THE CONTRACTORS SCHEDULE FOR THIS PROJECT, WHETHER SHOWN OR NOT SHOWN, AS IT RELATES TO THE CONSTRUCTION ACTIVITIES CONTEMPLATED IN THESE PLANS.

16. ALL WORK WITHIN THE PUBLIC RIGHT-OF-WAY IS SUBJECT TO THE JURISDICTION OF THE **SPOKANE COUNTY** ENGINEERING DEPARTMENT STANDARD DETAILS AND SPECIFICATIONS.

17. ALL CONSTRUCTION OPERATIONS , INCLUDING THE WARMING UP, REPAIR, ARRIVAL, DEPARTURE OR RUNNING OF TRUCKS, EARTH MOVING EQUIPMENT, CONSTRUCTION EQUIPMENT AND ANY OTHER ASSOCIATED EQUIPMENT SHALL GENERALLY BE LIMITED TO THE TIME PERIOD APPROVED BY **SPOKANE COUNTY**.

18. BASED ON A REQUIREMENT FROM **SPOKANE COUNTY** THE ENGINEER OR HIS DESIGNEE SHALL PERFORM MATERIALS TESTING AND QUALITY CONTROL ON THE PROJECT AND SHALL SUBMIT COPIES OF DAILY REPORTS, TEST REPORTS, PROJECT CERTIFICATION AND RECORD DRAWINGS TO THE **SPOKANE COUNTY** ENGINEER.

19. NO REVISIONS SHALL BE MADE TO THESE PLANS WITHOUT THE APPROVAL BY THE **SPOKANE COUNTY** ENGINEER AND NOTIFICATION OF THE ENGINEER OF RECORD.

THE DESIGN IMPROVEMENTS SHOWN IN THIS SET OF PLANS AND CALCULATIONS CONFORM TO APPLICABLE EDITIONS OF THE SPOKANE COUNTY STANDARDS FOR ROAD AND SEWER CONSTRUCTION AND THE SPOKANE COUNTY GUIDELINES FOR STORMWATER MANAGEMENT. ALL DESIGN DEVIATIONS HAVE BEEN APPROVED BY THE SPOKANE COUNTY ENGINEER. I APPROVE THESE PLANS FOR CONSTRUCTION.

LEGEND

EXISTING / PROPOSED
GENERAL
ROADWAY CENTER LINE
RIGHT OF WAY LINE
PROPERTY LINE
EASEMENT LINE
FENCE
CURB
PAVEMENT
GRAVEL
CONCRETE
BUILDINGS & STRUCTURES
SANITARY SEWER
SANITARY SEWER
MANHOLE
CLEANOUT
SEWER SERVICE
WATER
WATER LINE
VALVE (V)
FIRE HYDRANT (FH)
SERVICE (WS)
METER (WM)
BLOWOFF
AIR VACUUM RELIEF STATION (AVRS)
STORM DRAINAGE
DRAINAGE LINE
MANHOLE (MH)
DRYWELL (DW)
CATCH BASIN (CB)
DITCH
NATURAL GAS
GAS LINE (G)
VALVE (V)
METER (GM)
TELEPHONE - POWER
BURIED TELEPHONE (BT)
POWER OR TELEPHONE POLE (PP)
BURIED POWER (BP)
TRANSFORMER PAD (TP)
TELEPHONE RISER (TR)
TELEPHONE VAULT (TV)
OVERHEAD POWER (OP / OH)
GUY ANCHOR (GA)
POWER VAULT (PV)
LIGHT POLE (LP)

ROADWAY
SPOKANE COUNTY ENGINEERING
1026 WEST BROADWAY AVENUE
SPOKANE, WASHINGTON 99260
PHONE: 509-477-3600
CONTACT: MATT ZARECOR, P.E.

BUILDING OFFICIAL
SPOKANE COUNTY BUILDING AND PLANNING
1026 WEST BROADWAY AVENUE
SPOKANE, WASHINGTON 99260
PHONE: 509-477-7200

SEWER
SPOKANE COUNTY UTILITIES
1026 WEST BROADWAY AVENUE
SPOKANE, WASHINGTON 99260
PHONE: 509-477-3604
FAX: 509-477-4715
CONTACT: BILLY URHAUSEN

FIRE DEPARTMENT
FIRE DISTRICT NO. 1
EAST 10319 SPRAGUE AVENUE
SPOKANE VALLEY, WA 99206
PHONE: 509-928-1700
FAX: 509-892-4125
CONTACT: KEVIN MILLER

TELEPHONE
QWEST
904 NORTH COLUMBUS
SPOKANE, WASHINGTON, 99202
PHONE: 509-455-2580
FAX: 509-455-2104
CONTACT: DAVE CLARK

WATER PURVEYOR
CONSOLIDATED IRRIGATION
120 N. GREENACRES ROAD
GREENACRES, WA 99016
PHONE: 509-924-3655
FAX: 509-924-3927
CONTACT: BOB ASHCROFT

POWER
AVISTA UTILITIES
1411 EAST MISSION AVENUE
SPOKANE, WA 99220-3727216
PHONE: 509-495-4715
CONTACT: CHRIS FRACZ

CABLE
COMCAST BROADBAND
1717 EAST BUCKEYE
SPOKANE, WASHINGTON, 99207
PHONE: 509-484-4931
EXTENSION: 53254
CONTACT: JOEL BROST

NATURAL GAS
AVISTA UTILITIES
1411 EAST MISSION AVENUE
SPOKANE, WA 99220
PHONE: 509-495-4774
FAX: 509-495-8713
CONTACT: LOIS McCAIN

SOLID WASTE
WASTE MANAGEMENT
SPOKANE, WASHINGTON
PHONE: 509-466-3400

DEPT. OF HEALTH
SPOKANE COUNTY
1101 WEST COLLEGE AVENUE
SPOKANE, WA 99260
PHONE: 509-324-1560 EXT. 1
CONTACT: DON COPLEY

OWNER
MIKE SCHMITZ
5527 NORTH HAYFORD ROAD
SPOKANE, WA 99224
PHONE: (509) 462-9313
CONTACT: MIKE SCHMITZ

SURVEYOR
LANDTEK, LLC
619 NORTH MADELIA STREET
SPOKANE, WASHINGTON 99202
PHONE: 509-926-2821
FAX: 509-926-2736
CONTACT: BRUCE R. LARSEN, P.L.S.

INSPECTION
ALLWEST
1010 N. LAKE ROAD
SPOKANE, WASHINGTON 99212
PHONE: 509-534-4411
FAX: 509-534-9326
CONTACT: PAUL T. NELSON, P.E.

ABBREVIATIONS

SS	SANITARY SEWER	PI	POINT OF INTERSECTION	STA.	STATION
WM.	WATER MAIN	PC.	POINT OF CURVE	G.	GRADE
MH.	MANHOLE	PT.	POINT OF TANGENCY	GB	GRADE BREAK
EXIST.	EXISTING	PRC.	POINT OF REVERSE CURVE	I.E.	INVERT ELEVATION
CO.	SEWER CLEANOUT	CT.	COURT	RIM EL	RIM ELEVATION
HYD.	HYDRANT	RD.	ROAD	DIA.	DIAMETER
RT.	RIGHT	LN.	LANE	SI.	STREET INTERSECTION
LT.	LEFT	STA. L.	STATION LENGTH	BDRY.	BOUNDARY
		ACT L	ACTUAL LENGTH	PET	PETROLEUM

INDEX TO PLAN SHEETS

SHEET NO. 1 COVER SHEET AND NOTES
SHEET NO. 2 NOTES AND DETAILS
SHEET NO. 3 MYERS ROAD PROFILE
SHEET NO. 4 MYERS ROAD PROFILE
SHEET NO. 5 1ST AVE ROAD PROFILE
SHEET NO. 6 CUL DE SAC CURB PROFILES
SHEET NO. 7 INTERSECTION DETAIL
SHEET NO. 8 POND DETAILS
SHEET NO. 9 POND DETAILS
SHEET NO. 10 POND DETAILS
SHEET NO. 11 DRAINAGE DETAILS
SHEET NO. 12 DRAINAGE DETAILS
SHEET NO. 13 EROSION CONTROL PLAN
SHEET NO. 14 EROSION CONTROL DETAILS

SPOKANE COUNTY ENGINEERS OFFICE
OFFICIAL PUBLIC DOCUMENT ORIGINAL
CONSTRUCTION PLANS
PROJECT #: P-1957
DATE ACCEPTED: 7-5-06
ACCEPTANCE EXPIRES: 7-5-08
PROJECT LANE MILES PUBLIC .61
PROJECT LANE MILES PRIVATE N/A
CONSTRUCTION DOCUMENTATION AND CERTIFIED RECORD DRAWINGS, "AS-BUILTS" ARE REQUIRED PRIOR TO COUNTY ACCEPTANCE AND ESTABLISHMENT OF THE ROADS AND DRAINAGE FACILITIES FOR MAINTENANCE.
PERMIT REQUIRED (509) 477-3600
NOTIFY PERMIT ENGINEER 2 BUSINESS DAYS PRIOR TO CONSTRUCTION

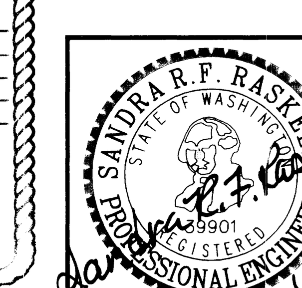

EXPIRES 1/15/08

NAVD 88
BASED ON NORTH AMERICAN VERTICAL DATUM OF 1988 (NAVD-88). ORIGINATING FROM COUNTY BENCH MARK #57. ELEV=2051.01

DEVELOPER'S APPROVAL

6-28-06
DATE

NO.	DATE	BY	REVISIONS
4	06/08	GFR	FINAL MYLARS FOR APPROVAL
3	05/24	GFR	2ND PLAN SUBMITTAL FOR REVIEW
2	05/12	GFR	1ST PLAN SUBMITTAL FOR REVIEW
1	04/17	GFR	ORIGINAL PLAN PREPARATION

SCALE:
HORIZONTAL: N.A.
VERTICAL: N.A.

PROJ #: 2004-83
DATE: 05/12/06
DRAWN: GFR
APPROVED: SRFR

WCE
WHIPPLE CONSULTING ENGINEERS
CIVIL AND TRANSPORTATION ENGINEERING
13218 E. SPRAGUE AVENUE
SPOKANE VALLEY, WASHINGTON 99216
PH: 509-893-2617 FAX: 509-926-0227

STREET AND DRAINAGE PLANS
MICA VIEW MEADOWS
COVER SHEET
SPOKANE COUNTY WASHINGTON

SHEET 1 OF 14

JOB NUMBER
2004-83

P-1957 Eng Road Drainage

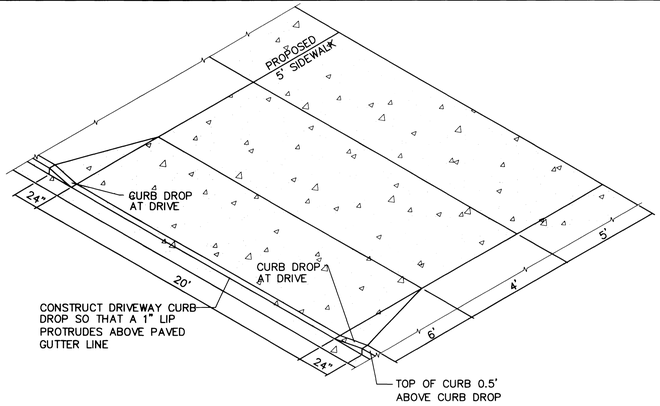

TYPICAL DRIVEWAY DETAIL (MODIFIED) — 4 / -

NOT TO SCALE

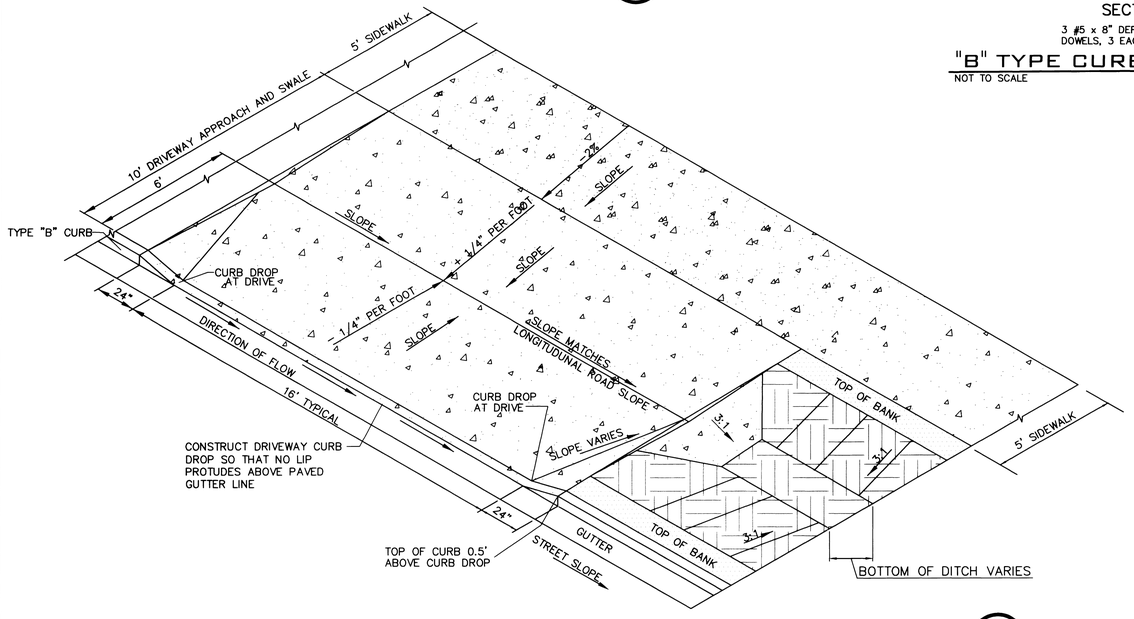

DRIVEWAY DETAIL FOR SWALE AREAS — 2 / -

NOT TO SCALE

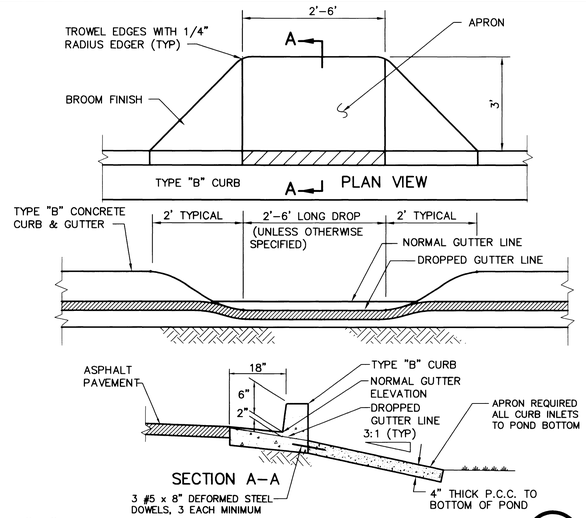

"B" TYPE CURB INLET — 3 / -

NOT TO SCALE

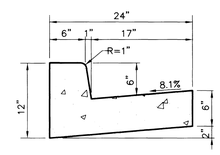

"B" TYPE CURB — 1 / -

NOT TO SCALE

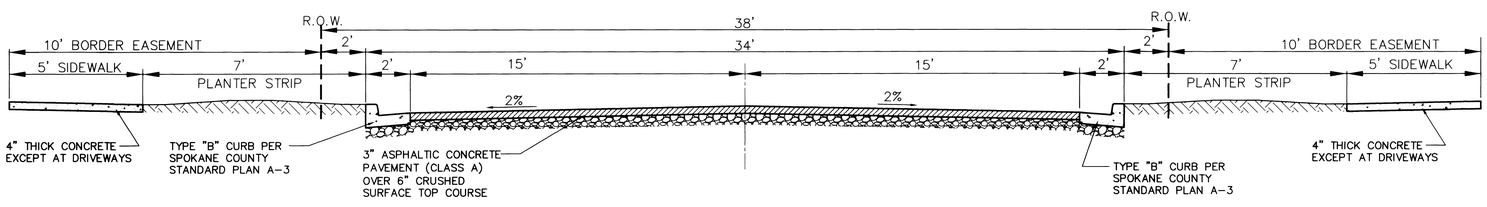

TYPICAL ROADWAY SECTION FOR MYERS RD. AND 1ST AVE. — A / -

NOT TO SCALE

STORM DRAINAGE NOTES

UNDERGROUND SERVICE ALERT ONE-CALL NUMBER 456·8000 CALL TWO BUSINESS DAYS BEFORE YOU DIG

1. SEE STREET PLAN AND PROFILE SHEETS FOR DRYWELL AND CATCH BASIN TYPES AND LOCATIONS.

2. SWALES SHALL BE CONSTRUCTED PER THE REQUIREMENTS OF THESE DRAWINGS INCLUDING GRADING, SOD, AND DRYWELL INSTALLATION. ALL SWALES WITHIN TRACTS SHALL INCLUDE AN IRRIGATION SYSTEM. ALL IRRIGATION SHALL CONFORM TO THE **SPOKANE COUNTY** SWALE IRRIGATION SYSTEM GUIDELINES.

3. ALL "208" SWALES SHOWN SHALL BE ROUGH GRADED PRIOR TO PAVING OF ADJACENT ROADWAY.

4. CONTRACTOR SHALL PROVIDE **SPOKANE COUNTY** WITH RECORD IRRIGATION PLANS UPON COMPLETION OF ALL SWALE CONSTRUCTION.

5. INSTALL "AMOCO" #4545 FILTER FABRIC (OR APPROVED EQUAL) IN ALL DRYWELLS BETWEEN NATIVE SOILS AND DRAIN ROCK. SEE SPOKANE COUNTY STANDARDS (2001 EDITION) SHEET B-1a FOR INSTALLATION LOCATIONS.

6. ALL PONDS WITHIN THE COUNTY RIGHT-OF-WAY, IN THE AREA ASSOCIATED WITH THIS PROJECT, SHALL BE COMPLETED DURING THE CONSTRUCTION OF THE ROADWAY. THE CONTRACTOR SHALL PERFORM THE SWALE GRADE WORK, INSTALL THE IRRIGATION SYSTEM, AND PLACE THE SOD WITHIN THE SWALES FOLLOWING THE ROAD PAVING WORK.

7. THE CONTRACTOR SHALL MAKE AN EFFORT TO PROTECT ALL DRAINAGE STRUCTURES FROM BEING CONTAMINATED WITH SILT BY INSTALLING FILTER FABRIC UNDER THE LID FOR AT LEAST 6 WEEKS, OR UNTIL THE ESTABLISHMENT OF GRASS AND/OR OTHER SITE CONSTRUCTION WORK HAS ENDED. IN THE EVENT THAT SILT OR OTHER DELETERIOUS MATERIAL IS ALLOWED TO ENTER THE DRYWELLS OR CATCH BASINS, THE CONTRACTOR WILL BE REQUIRED TO CLEAN THE DRYWELL OR CATCH BASIN OUT TO THE SATISFACTION OF THE CERTIFYING ENGINEER.

8. ALL LANDSCAPE AREAS ('208' SWALES) ARE TO BE IRRIGATED BY AN AN AUTOMATIC IRRIGATION SYSTEM INSTALLED BY OR UNDER THE DIRECTION OF THE LANDSCAPE CONTRACTOR. THE IRRIGATION SYSTEM SHALL COMPLY WITH ALL LOCAL CODES AND ORDINANCES (90 DAY GUARANTEE). AN APPROVED BACKFLOW DEVICE SHALL BE INSTALLED TO PREVENT WATER FROM GOING BACK INTO THE WATER SUPPLY.

PROVIDE SLEEVING AS REQUIRED UNDER SIDEWALKS, PATHS, CURBING, PAVING, ETC. AS NEEDED FOR IRRIGATION ACCESS. ALL SLEEVING TO BE 4" PVC. WITH AT LEAST 12" OF COVER (1) FOOT BELOW FINISH GRADE. THE OWNER/GENERAL CONTRACTOR IS RESPONSIBLE FOR INSTALLING SLEEVING BEFORE CURBING, SIDEWALKS, PAVING, ETC. IS INSTALLED. PATCH ASPHALT AS NEEDED.

LAWN AREAS: LAWN AREAS ARE TO BE IRRIGATED WITH TORO POP-UP HEADS OR EQUIVALENT. (TEST SYSTEM BEFORE BACKFILLING).

SLEEVING:
ADJUSTMENT: AFTER INSTALLATION, ADJUST VALVES, HEADS, EMITTERS, ETC., TO PROVIDE UNIFORM COVERAGE AND TO MINIMIZE OVER SPRAY ON WALLS, FENCES, WALKS, DRIVES, ETC.

WATER POWER SUPPLY: THE OWNER/ GENERAL CONTRACTOR IS TO SUPPLY WATER TAPS FOR HOOK-UP AND SUPPLY POWER FOR CONTROLLER.

9. THE FLOOR OF A GRASSED PERCOLATION AREA (G.P.A.) SWALE INCLUDES THE LEVEL PORTION OF THE FLOOR OF THE SWALE, AND THE SIDE SLOPES OF THE SWALE UP TO THE G.P.A. OVERFLOW ELEVATION OR TOP OF DRYWELL. THE SOIL LOCATED IN THE FLOOR OF THE G.P.A. SWALE SHALL BE A MEDIUM TO WELL-DRAINING MATERIAL, WITH A MINIMUM INFILTRATION RATE OF 0.5 INCHES PER HOUR. THE ENGINEER SHALL PROVIDE A WRITTEN STATEMENT WHICH VERIFIES THAT ALL G.P.A. SWALES CONFORM TO THIS REQUIREMENT. THIS WRITTEN STATEMENT SHALL BE SUBMITTED TO THE **SPOKANE COUNTY** ENGINEER'S OFFICE PRIOR TO INSTALLING FINISHED LANDSCAPING/SOD AND PRIOR TO FINAL ACCEPTANCE. THE SWALE FLOOR MATERIAL SHALL BE INSTALLED TO A NATIVE SOIL STRATUM WHICH ALSO MEETS OR EXCEEDS THIS MINIMUM PERCOLATION RATE OF 0.5 INCHES PER HOUR.

STREET GENERAL NOTES

THE CONTRACTOR SHALL PROVIDE ALL MATERIALS, LABOR, AND EQUIPMENT TO CONSTRUCT AND INSTALL TO PROPER WORKING ORDER. ALL IMPROVEMENTS AS DETAILED OR CALLED OUT ON THESE PLANS.

1. ALL WORK AND MATERIALS SHALL BE IN CONFORMANCE WITH THE **SPOKANE COUNTY** STANDARDS FOR ROAD AND SEWER CONSTRUCTION, CURRENT EDITION, AND AS AMENDED.

2. THE CONTRACTOR IS REQUIRED TO HAVE A VALID CONSTRUCTION PERMIT ON SITE AT ALL TIMES. THE ABSENCE OF THE PERMIT WILL RESULT IN AN IMMEDIATE SHUTDOWN OF WORK AND THE POSSIBLE REMOVAL OF THOSE ITEMS CONSTRUCTED WITHOUT THE PERMIT.

3. LOCATIONS OF EXISTING UTILITIES SHOWN IN THE PLANS ARE APPROXIMATE. THE CONTRACTOR SHALL BE RESPONSIBLE FOR LOCATING ALL UNDERGROUND UTILITIES. ANY CONFLICTING UTILITIES SHALL BE RELOCATED PRIOR TO CONSTRUCTION OF ROAD AND DRAINAGE FACILITIES.

4. THE CONTRACTOR IS REQUIRED TO HAVE A COMPLETE SET OF THE APPROVED ROAD AND DRAINAGE PLANS ON THE JOB SITE WHENEVER CONSTRUCTION IS IN PROGRESS.

5. IF THE CONTRACTOR DISCOVERS ANY DISCREPANCIES BETWEEN THE PLANS AND EXISTING CONDITIONS ENCOUNTERED, THE CONTRACTOR SHALL IMMEDIATELY NOTIFY THE DESIGN ENGINEER, SANDRA R.F. RASKELL, P.E., ✆ 509-893-2617, THE SITE/PROJECT INSPECTING ENGINEER OR HIS REPRESENTATIVE, AND THE **SPOKANE COUNTY** ENGINEER'S OFFICE, CONSTRUCTION ENGINEER, ✆ 509-477-3600.

6. FOR CONSTRUCTION OF DRYWELLS, INSTALL FILTER FABRIC, "AMOCO" 4545 OR APPROVED EQUAL, BETWEEN THE WASHED DRAINROCK AND NATIVE SOILS PER **SPOKANE COUNTY** STANDARD DETAIL B-1a.

7. PRIOR TO SITE CONSTRUCTION, THE CONTRACTOR IS RESPONSIBLE FOR LOCATING ALL UNDERGROUND UTILITIES. CALL THE UNDERGROUND UTILITY LOCATION SERVICE AT 456-8000 BEFORE YOU DIG.

8. THE CONTRACTOR SHALL MAKE AN EFFORT TO PROTECT ALL CATCH BASINS AND DRYWELLS FROM BEING CONTAMINATED WITH SILT BY INSTALLING FILTER FABRIC UNDER THE LID FOR AT LEAST 6 WEEKS, OR UNTIL THE ESTABLISHMENT OF GRASS AND/OR OTHER SITE CONSTRUCTION WORK HAS ENDED.

IN THE EVENT THAT SILT OR OTHER DELETERIOUS MATERIAL IS ALLOWED TO ENTER THE DRYWELLS OR CATCH BASINS THE CONTRACTOR WILL BE REQUIRED TO CLEAN OUT THE DRYWELL OR CATCH BASIN TO THE SATISFACTION OF THE CERTIFYING ENGINEER.

9. THE CONTRACTOR SHALL EMPLOY A LICENSED SURVEYOR TO VERIFY THAT THE CROSS- GUTTER FORMS ARE THE CORRECT PLAN GRADE PRIOR TO CONCRETE PLACEMENT. THE CROSS-GUTTERS SHALL BE CONSTRUCTED PRIOR TO PAVING, AND THE PAVEMENT SHALL THEN MATCH THE EDGE OF CONCRETE GUTTER.

10. ALL DRYWELL CONNECTION PIPES SHALL BE PLACED BELOW THE DRYWELL CONE AND SHALL FLOW AS DIRECTED IN THE PLANS.

11. FOR ANY CURB GRADES LESS THAN 0.8 % (0.008 FT./FT.), A WASHINGTON STATE LICENSED PROFESSIONAL LAND SURVEYOR SHALL VERIFY THAT THE CURB FORMS ARE AT THE GRADES NOTED ON THE APPROVED PLANS, PRIOR TO PLACEMENT OF CURB MATERIAL. THE CONTRACTOR IS RESPONSIBLE FOR ARRANGING AND COORDINATING WORK WITH THE PROFESSIONAL LAND SURVEYOR.

SPOKANE COUNTY ENGINEERS OFFICE
OFFICIAL PUBLIC DOCUMENT ORIGINAL
CONSTRUCTION PLANS
PROJECT #: P-1957
DATE ACCEPTED: 7-5-06
ACCEPTANCE EXPIRES: 7-5-08
PROJECT LANE MILES PUBLIC: 1.61
PROJECT LANE MILES PRIVATE: N/A
CONSTRUCTION DOCUMENTATION AND CERTIFIED RECORD DRAWINGS, "AB-BUILTS" ARE REQUIRED PRIOR TO COUNTY ACCEPTANCE AND ESTABLISHMENT OF THE ROADS AND DRAINAGE FACILITIES FOR MAINTENANCE.
PERMIT REQUIRED! (509) 477-3600
NOTIFY PERMIT ENGINEER 2 BUSINESS DAYS PRIOR TO CONSTRUCTION

SANDRA R.F. RASKELL — STATE OF WASHINGTON — 29901 — REGISTERED PROFESSIONAL ENGINEER — 6/8/06
EXPIRES 1/15/08

COUNTY DATUM
BASED ON NORTH AMERICAN VERTICAL DATUM OF 1988 (NAVD-88), ORIGINATING FROM COUNTY BENCH MARK #57, ELEV=2051.01

DEVELOPER'S APPROVAL — DATE 6-28-06

NO.	DATE	BY	REVISIONS
4	06/08	GFR	FINAL MYLARS FOR APPROVAL
3	05/24	GFR	2ND PLAN SUBMITTAL FOR REVIEW
2	05/12	GFR	1ST PLAN SUBMITTAL FOR REVIEW
1	04/17	GFR	ORIGINAL PLAN PREPARATION

SCALE: HORIZONTAL: N.A. VERTICAL: N.A.

PROJ #: 2004-83
DATE: 05/12/06
DRAWN: GFR
APPROVED: SRFR

WCE
WHIPPLE CONSULTING ENGINEERS
CIVIL AND TRANSPORTATION ENGINEERING
13218 E. SPRAGUE AVENUE
SPOKANE VALLEY, WASHINGTON 99216
PH: 509-893-2617 FAX: 509-926-0227

STREET AND DRAINAGE PLANS
MICA VIEW MEADOWS
NOTES AND DETAILS
SPOKANE COUNTY WASHINGTON

SHEET 2 OF 14
JOB NUMBER 2004-83

P-1957 Eng/Road/Drainage

CURVE TABLE				
CURVE	LENGTH	RADIUS	CHORD	DELTA ANGLE
C1	49.49	31.50	44.55	90°00'33"
C5	49.48	31.50	44.54	89°59'27"
C6	49.49	31.50	44.55	90°00'33"
C10	49.48	31.50	44.54	89°59'27"

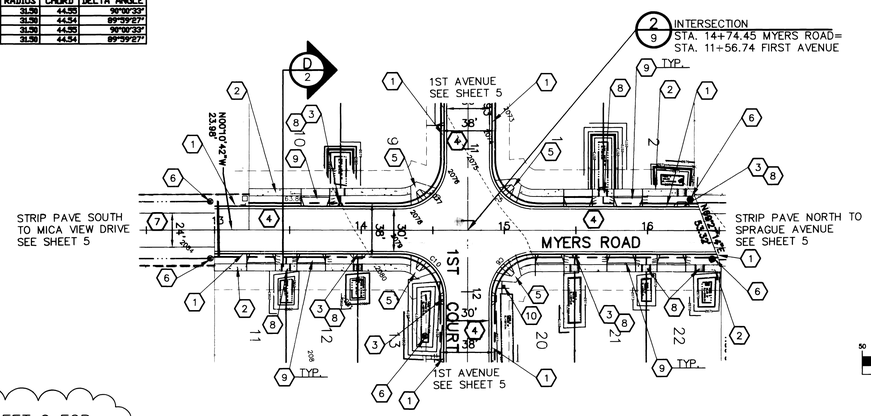

SEE SHEET 2 FOR MYERS ROAD SECTION

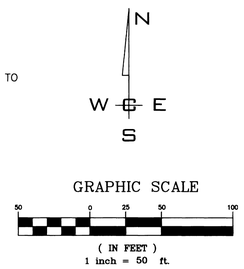

CONSTRUCTION NOTES

1. PROVIDE AND INSTALL "B" TYPE CURB PER DETAIL 1 SHEET 2.
2. PROVIDE AND INSTALL CEMENT CONCRETE SIDEWALK PER SPOKANE COUNTY STANDARD PLAN A-1.
3. PROVIDE AND INSTALL TYPE "1" CURB INLET PER SPOKANE COUNTY STANDARD PLAN B-8 AND DETAIL 3 SHEET 2.
4. PROVIDE AND INSTALL 3" OF ASPHALTIC CONCRETE PAVEMENT OVER 6" OF CRUSHED SURFACE TOP COURSE.
5. PROVIDE AND INSTALL CURB RAMP DESIGN "A" PER SPOKANE COUNTY STANDARD PLAN A-5.
6. PROVIDE AND INSTALL TYPE "A" DRYWELL PER SPOKANE COUNTY SANDARD PLAN B1-A.
7. PROVIDE AND INSTALL 2" OF ASPHALTIC CONCRETE PAVEMENT OVER 6" OF CRUSHED SURFACE TOP COURSE
8. PROVIDE AND INSTALL TYPE "2" CURB INLET PER SPOKANE COUNTY STANDARD PLAN B-9 AND SWALE DETAIL 1 SHEET 10.
9. PROVIDE AND INSTALL DRIVEWAY PER DETAIL 2 SHEET 2.
10. PROVIDE AND INSTALL INTERSECTION STREET NAME SIGN PER SPOKANE COUNTY STANDARD PLAN A-16.

UNDERGROUND SERVICE ALERT
ONE-CALL NUMBER
456·8000
CALL TWO BUSINESS DAYS BEFORE YOU DIG

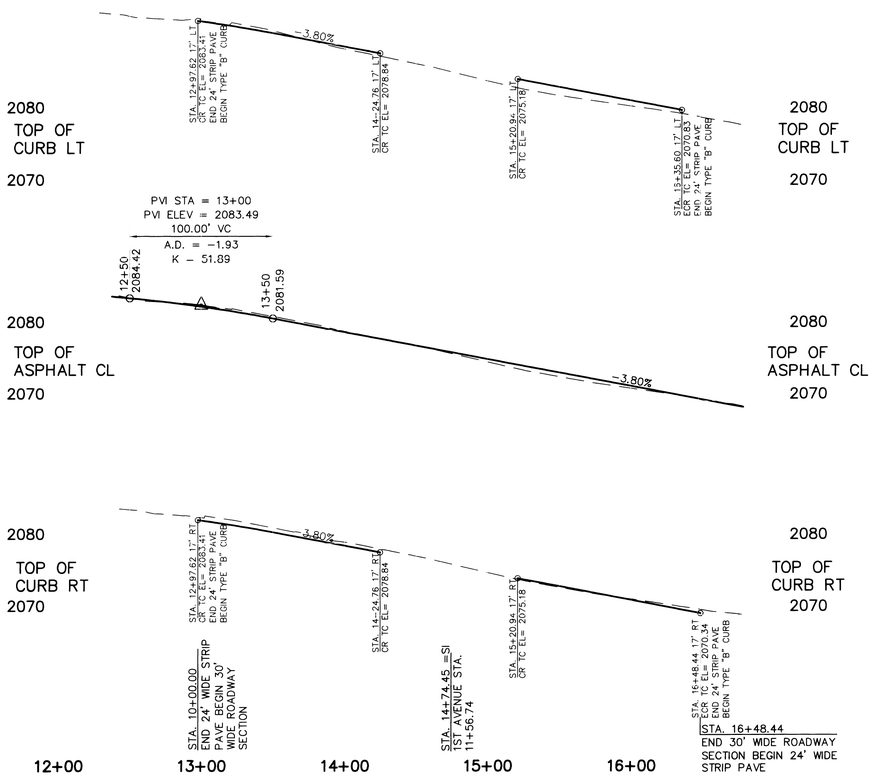

SPOKANE COUNTY ENGINEERS OFFICE
OFFICIAL PUBLIC DOCUMENT ORIGINAL
CONSTRUCTION PLANS
PROJECT #: P-1957
DATE ACCEPTED: 7-5-06
ACCEPTANCE EXPIRES: 7-5-08
PROJECT LANE MILES PUBLIC: 1.61
PROJECT LANE MILES PRIVATE: N/A
CONSTRUCTION DOCUMENTATION AND CERTIFIED RECORD DRAWINGS, "AS-BUILTS" ARE REQUIRED PRIOR TO COUNTY ACCEPTANCE AND ESTABLISHMENT OF THE ROADS AND DRAINAGE FACILITIES FOR MAINTENANCE.
PERMIT REQUIRED! (509) 477-3600
NOTIFY PERMIT ENGINEER 2 BUSINESS DAYS PRIOR TO CONSTRUCTION

SANDRA R. F. RASMUSSEN
STATE OF WASHINGTON
29901
REGISTERED
PROFESSIONAL ENGINEER
6/7/06
EXPIRES 1/15/08

COUNTY DATUM
BASED ON NORTH AMERICAN VERTICAL DATUM OF 1988 (NAVD-88).
ORIGINATING FROM COUNTY BENCH MARK #57, ELEV=2051.01

DEVELOPER'S APPROVAL — DATE 6-28-06

NO.	DATE	BY	REVISIONS
4	06/08	GFR	FINAL MYLARS FOR APPROVAL
3	05/24	GFR	2ND PLAN SUBMITTAL FOR REVIEW
2	05/12	GFR	1ST PLAN SUBMITTAL FOR REVIEW
1	04/17	GFR	ORIGINAL PLAN PREPARATION

SCALE:
HORIZONTAL: 1"=50'
VERTICAL: 1"=10'

PROJ #: 2004-83
DATE: 05/12/06
DRAWN: GFR
APPROVED: SRFR

WCE
WHIPPLE CONSULTING ENGINEERS
CIVIL AND TRANSPORTATION ENGINEERING
13218 E. SPRAGUE AVENUE
SPOKANE VALLEY, WASHINGTON 99216
PH: 509-893-2617 FAX: 509-926-0227

STREET AND DRAINAGE PLANS
MICA VIEW MEADOWS
MYERS ROAD PROFILE
SPOKANE COUNTY WASHINGTON

SHEET 3 OF 14
JOB NUMBER 2004-83

P-1957 Eny Road Drainage

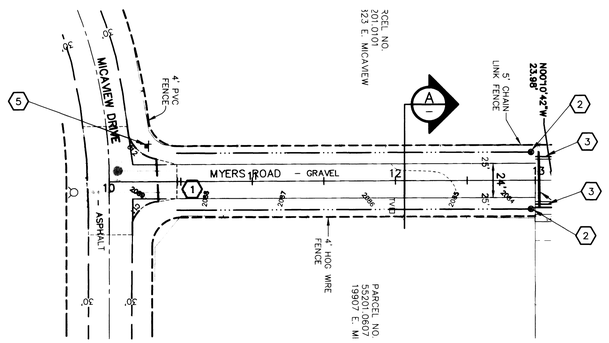

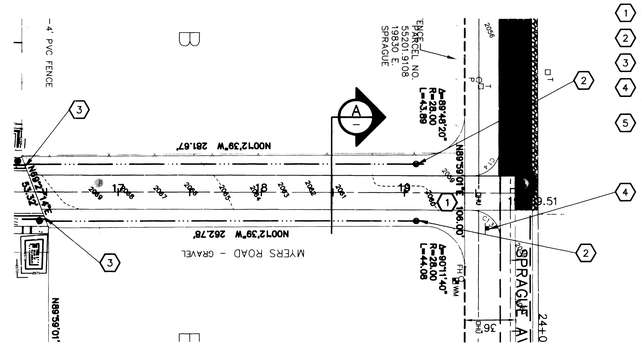

CONSTRUCTION NOTES

1. PROVIDE AND INSTALL 3" OF ASPHALTIC CONCRETE PAVEMENT OVER 6" OF CRUSHED SURFACE TOP COURSE.
2. PROVIDE AND INSTALL TYPE "A" DRYWELL PER SPOKANE COUNTY SANDARD PLAN B1-A.
3. PROVIDE AND INSTALL TYPE "B" CURB PER DETAIL 1 SHEET 2.
4. PROVIDE AND INSTALL STOP SIGN AND INTERSECTION STREET NAME SIGN PER SPOKANE COUNTY STANDARD PLAN A-16 AND THE M.U.T.C.D.
5. PROVIDE AND INSTALL INTERSECTION STREET NAME SIGN PER SPOKANE COUNTY STANDARD PLAN A-16.

UNDERGROUND SERVICE ALERT
ONE-CALL NUMBER
456·8000
CALL TWO BUSINESS DAYS BEFORE YOU DIG

SEE THIS SHEET FOR STRIP PAVE ROAD SECTION

CURVE TABLE				
CURVE	LENGTH	RADIUS	CHORD	DELTA ANGLE
C11	33.42	19.50	29.48	96°11'26"
C12	33.16	24.37	30.66	77°59'13"
C13	31.29	20.00	28.19	89°37'50"
C14	31.55	20.00	28.38	90°23'03"

GRAPHIC SCALE
50 0 25 50 100
(IN FEET)
1 inch = 50 ft.

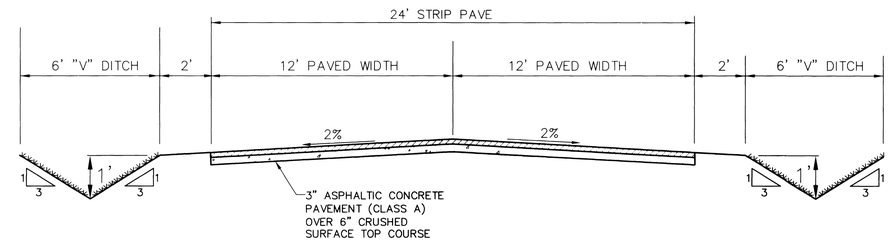

24' STRIP PAVE ROAD SECTION

NOT TO SCALE

A

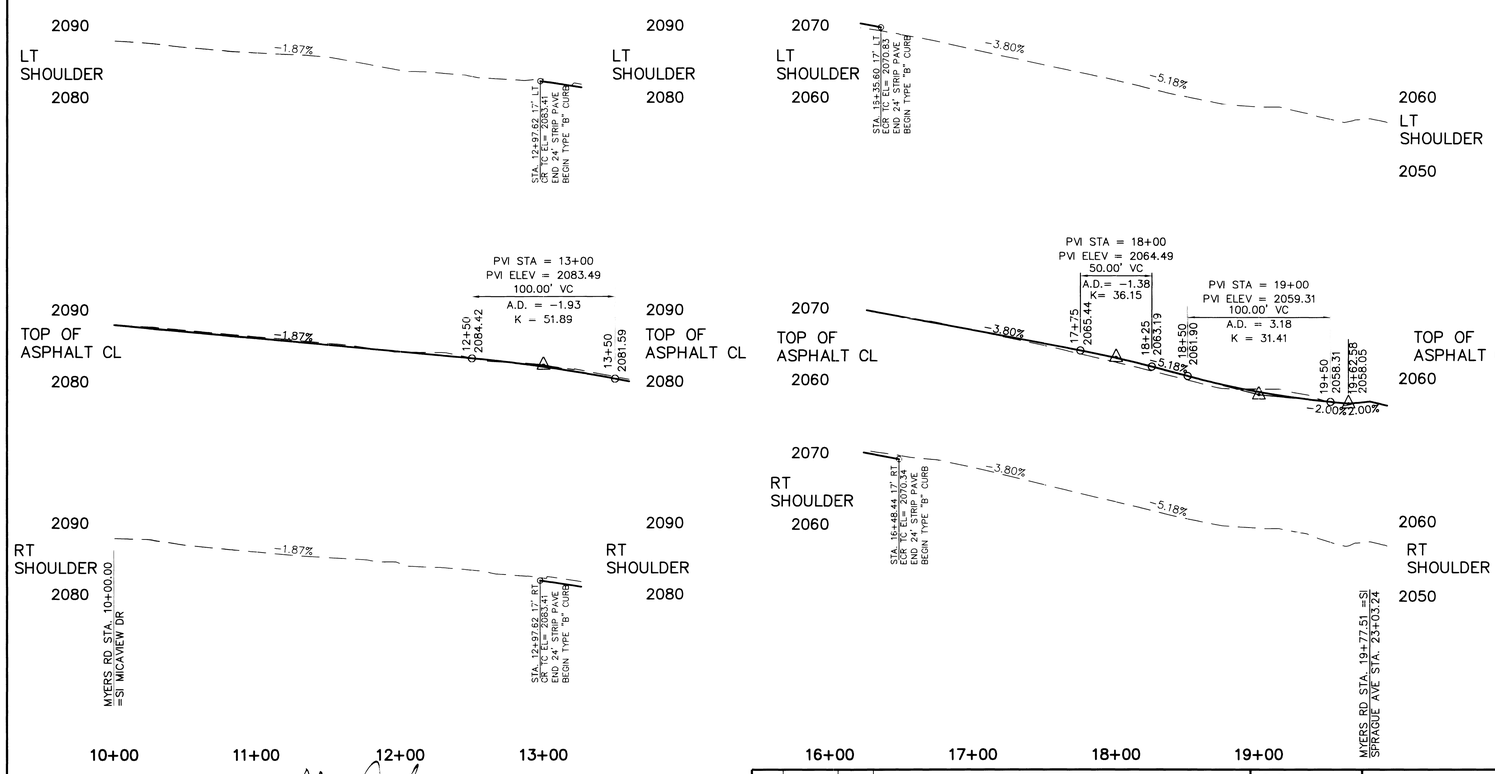

COUNTY DATUM
BASED ON NORTH AMERICAN VERTICAL DATUM OF 1988 (NAVD-88). ORIGINATING FROM COUNTY BENCH MARK #57, ELEV=2051.01

DEVELOPER'S APPROVAL

6-28-06
DATE

SPOKANE COUNTY ENGINEERS OFFICE
OFFICIAL PUBLIC DOCUMENT ORIGINAL
CONSTRUCTION PLANS
PROJECT #: P-1957
DATE ACCEPTED: 7-5-06
ACCEPTANCE EXPIRES: 7-5-08
PROJECT LANE MILES PUBLIC: 0.6
PROJECT LANE MILES PRIVATE: N/A
CONSTRUCTION DOCUMENTATION AND CERTIFIED RECORD DRAWINGS, "AS-BUILTS" ARE REQUIRED PRIOR TO COUNTY ACCEPTANCE AND ESTABLISHMENT OF THE ROADS AND DRAINAGE FACILITIES FOR MAINTENANCE.
PERMIT REQUIRED! (509) 477-3600
NOTIFY PERMIT ENGINEER 2 BUSINESS DAYS PRIOR TO CONSTRUCTION

SANDRA R.F. RASKEN
STATE OF WASHINGTON
39901
REGISTERED PROFESSIONAL ENGINEER
6/28/06
EXPIRES 1/15/08

NO.	DATE	BY	REVISIONS
4	06/08	GFR	FINAL MYLARS FOR APPROVAL
3	05/24	GFR	2ND PLAN SUBMITTAL FOR REVIEW
2	05/12	GFR	1ST PLAN SUBMITTAL FOR REVIEW
1	04/17	GFR	ORIGINAL PLAN PREPARATION

SCALE:
HORIZONTAL: 1"=50'
VERTICAL: 1"=10'

PROJ #: 2004-83
DATE: 05/12/06
DRAWN: GFR
APPROVED: SRFR

WCE
WHIPPLE CONSULTING ENGINEERS
CIVIL AND TRANSPORTATION ENGINEERING
13218 E. SPRAGUE AVENUE
SPOKANE VALLEY, WASHINGTON 99216
PH: 509-893-2617 FAX: 509-926-0227

STREET AND DRAINAGE PLANS
MICA VIEW MEADOWS
MYERS ROAD PROFILE
SPOKANE COUNTY WASHINGTON

SHEET 4 OF 14
JOB NUMBER 2004-83

P-1957 Eng Road Drainage

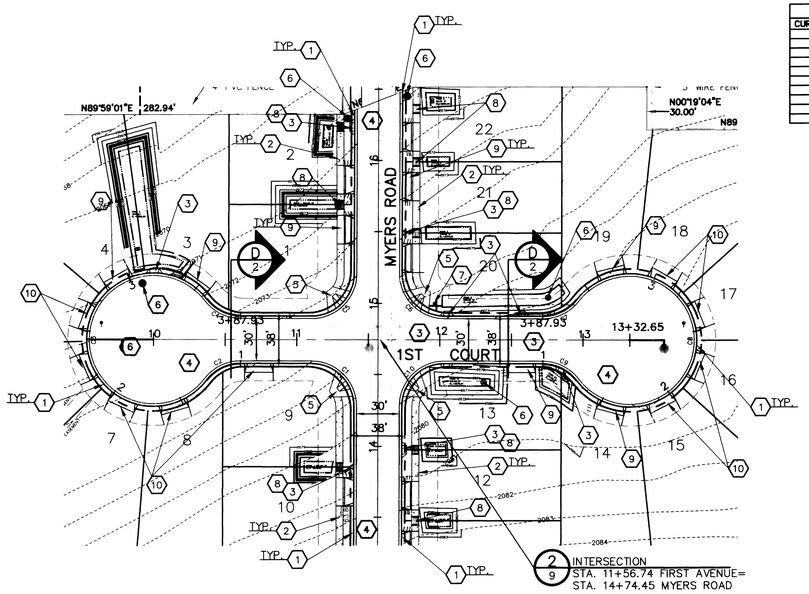

CURVE TABLE				
CURVE	LENGTH	RADIUS	CHORD	DELTA ANGLE
C1	49.49	31.50	44.55	90°00'33"
C2	28.90	31.50	27.90	52°33'39"
C3	223.94	45.00	54.71	285°17'37"
C4	28.90	31.50	27.90	52°33'39"
C5	49.48	31.50	44.54	89°59'27"
C6	49.49	31.50	44.55	90°00'33"
C7	28.90	31.50	27.90	52°33'39"
C8	223.94	45.00	54.71	285°17'37"
C9	28.90	31.50	27.90	52°33'39"
C10	49.48	31.50	44.54	89°59'27"

N
W E
S

GRAPHIC SCALE

50 0 25 50 100

(IN FEET)
1 inch = 50 ft.

UNDERGROUND SERVICE ALERT
ONE-CALL NUMBER
456·8000
CALL TWO BUSINESS DAYS BEFORE YOU DIG

CONSTRUCTION NOTES

1. PROVIDE AND INSTALL "B" TYPE CURB PER DETAIL 1 SHEET 2.
2. PROVIDE AND INSTALL CEMENT CONCRETE SIDEWALK PER SPOKANE COUNTY STANDARD PLAN A-1.
3. PROVIDE AND INSTALL TYPE "1" CURB INLET PER SPOKANE COUNTY STANDARD PLAN B-8 AND DETAIL 3 SHEET 2.
4. PROVIDE AND INSTALL 3" OF ASPHALTIC CONCRETE PAVEMENT OVER 6" OF CRUSHED SURFACE TOP COURSE.
5. PROVIDE AND INSTALL CURB RAMP DESIGN "A" PER SPOKANE COUNTY STANDARD PLAN A-5.
6. PROVIDE AND INSTALL TYPE "A" DRYWELL PER SPOKANE COUNTY SANDARD PLAN B1-A.
7. PROVIDE AND INSTALL INTERSECTION STREET NAME SIGN PER SPOKANE COUNTY STANDARD PLAN A-16.
8. PROVIDE AND INSTALL TYPE "2" CURB INLET PER SPOKANE COUNTY STANDARD PLAN B-9 AND SWALE DETAIL 1 SHEET 10.
9. PROVIDE AND INSTALL DRIVEWAY PER DETAIL 2 SHEET 2.
10. PROVIDE AND INSTALL DRIVEWAY PER DETAIL 4 SHEET 2.

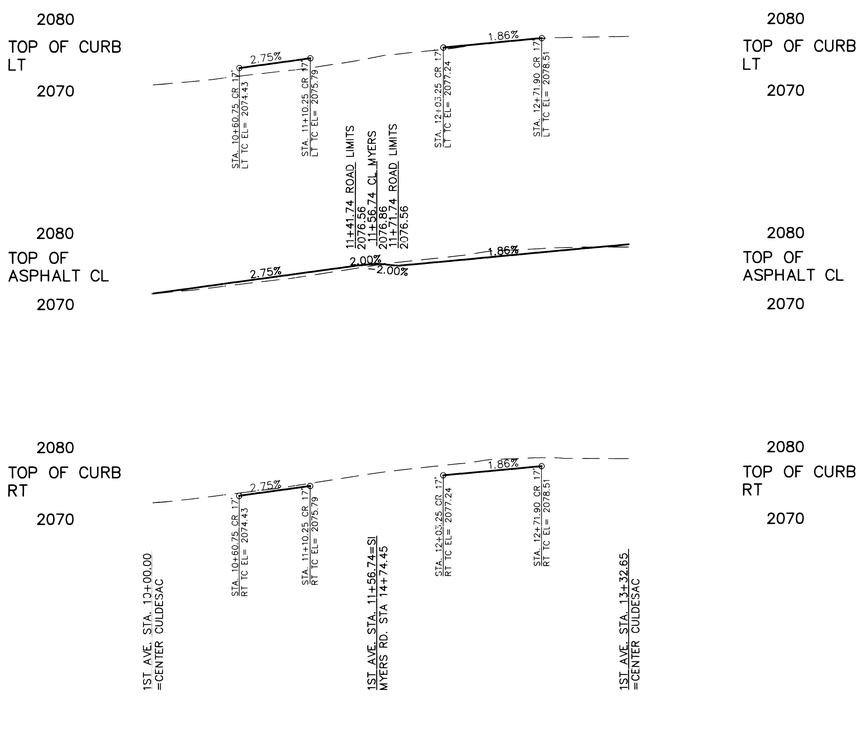

NAVD 88
BASED ON NORTH AMERICAN VERTICAL DATUM OF 1988 (NAVD-88). ORIGINATING FROM COUNTY BENCH MARK #57, ELEV=2051.01

DEVELOPER'S APPROVAL

6-28-06
DATE

NO.	DATE	BY	REVISIONS
4	06/08	GFR	FINAL MYLARS FOR APPROVAL
3	05/24	GFR	2ND PLAN SUBMITTAL FOR REVIEW
2	05/12	GFR	1ST PLAN SUBMITTAL FOR REVIEW
1	04/17	GFR	ORIGINAL PLAN PREPARATION

SCALE:
HORIZONTAL: 1"=50'
VERTICAL: 1"=10'

PROJ #: 2004-83
DATE: 05/12/06
DRAWN: GFR
APPROVED: SRFR

WCE
WHIPPLE CONSULTING ENGINEERS
CIVIL AND TRANSPORTATION ENGINEERING
13218 E. SPRAGUE AVENUE
SPOKANE VALLEY, WASHINGTON 99216
PH: 509-893-2617 FAX: 509-926-0227

SPOKANE COUNTY ENGINEERS OFFICE
OFFICIAL PUBLIC DOCUMENT ORIGINAL
CONSTRUCTION PLANS
PROJECT #: P-1957
DATE ACCEPTED: 7-5-06
ACCEPTANCE EXPIRES: 7-5-08
PROJECT LANE MILES PUBLIC: 0.61
PROJECT LANE MILES PRIVATE: N/A
CONSTRUCTION DOCUMENTATION AND CERTIFIED RECORD DRAWINGS, "AS-BUILTS" ARE REQUIRED PRIOR TO COUNTY ACCEPTANCE AND ESTABLISHMENT OF THE ROADS AND DRAINAGE FACILITIES FOR MAINTENANCE.
PERMIT REQUIRED (509) 477-3600
NOTIFY PERMIT BY BUSINESS DAYS PRIOR TO CONSTRUCTION

SANDRA R.F. RASEY
STATE OF WASHINGTON
39901
REGISTERED PROFESSIONAL ENGINEER
6/8/06
EXPIRES 1/15/07

STREET AND DRAINAGE PLANS
MICA VIEW MEADOWS
1ST AVENUE PROFILE
SPOKANE COUNTY WASHINGTON

SHEET 5 OF 14

JOB NUMBER 2004-83

P-1957 Eng Road Drainage

CURVE TABLE				
CURVE	LENGTH	RADIUS	CHORD	DELTA ANGLE
C2	28.90	31.50	27.90	52°33'39"
C3	223.94	45.00	54.71	285°07'37"
C4	28.90	31.50	27.90	52°33'39"
C7	28.90	31.50	27.90	52°33'39"
C8	223.94	45.00	54.71	285°07'37"
C9	28.90	31.50	27.90	52°33'39"

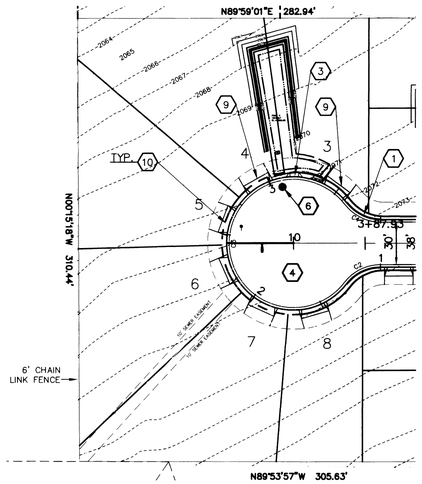

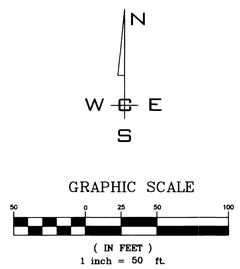

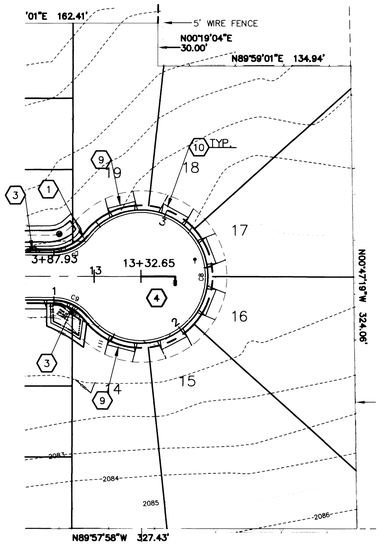

UNDERGROUND SERVICE ALERT
ONE-CALL NUMBER
456·8000
CALL TWO BUSINESS DAYS BEFORE YOU DIG

CONSTRUCTION NOTES

1. PROVIDE AND INSTALL "B" TYPE CURB PER DETAIL 1 SHEET 2.
2. NOT USED.
3. PROVIDE AND INSTALL TYPE "1" CURB INLET PER SPOKANE COUNTY STANDARD PLAN B-8 AND DETAIL 3 SHEET 2.
4. PROVIDE AND INSTALL 3" OF ASPHALTIC CONCRETE PAVEMENT OVER 6" OF CRUSHED SURFACE TOP COURSE.
5. NOT USED.
6. PROVIDE AND INSTALL TYPE "A" DRYWELL PER SPOKANE COUNTY SANDARD PLAN B1-A.
7. NOT USED.
8. NOT USED.
9. PROVIDE AND INSTALL DRIVEWAY PER DETAIL 2 SHEET 2.
10. PROVIDE AND INSTALL DRIVEWAY PER DETAIL 4 SHEET 2.

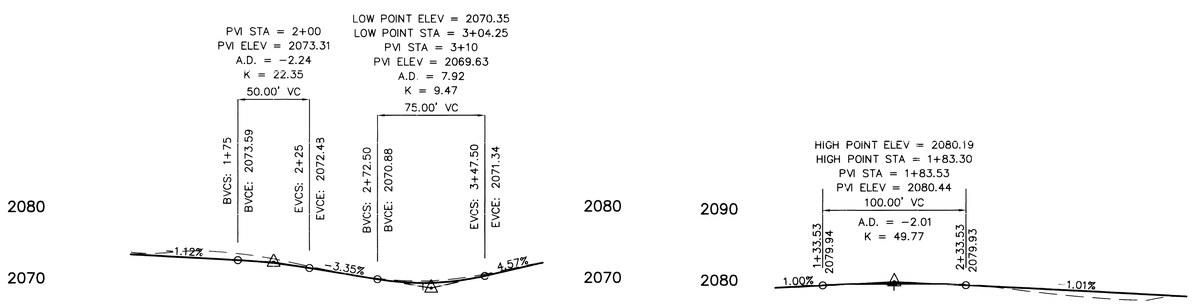

SPOKANE COUNTY ENGINEERS OFFICE
OFFICIAL PUBLIC DOCUMENT ORIGINAL
CONSTRUCTION PLANS
PROJECT #: P-1957
DATE ACCEPTED: 7-5-06
ACCEPTANCE EXPIRES: 7-5-08
PROJECT LANE MILES PUBLIC: N/A
PROJECT LANE MILES PRIVATE: N/A
CONSTRUCTION DOCUMENTATION AND CERTIFIED RECORD DRAWINGS, "AS-BUILTS" ARE REQUIRED PRIOR TO COUNTY ACCEPTANCE AND ESTABLISHMENT OF THE ROADS AND DRAINAGE FACILITIES FOR MAINTENANCE.
PERMIT REQUIRED! (509) 477-[illegible]
NOTIFY PERMIT ENGINEER 5 DAYS [illegible] PRIOR TO CONSTRUCTION

SANDRA R.F. RASKA
STATE OF WASHINGTON
16401
REGISTERED PROFESSIONAL ENGINEER
6/8/06
EXPIRES 1/15/08

1+00 2+00 3+00 4+00

NAVD 88
BASED ON NORTH AMERICAN VERTICAL DATUM OF 1988 (NAVD-88). ORIGINATING FROM COUNTY BENCH MARK #57. ELEV=2051.01

DEVELOPER'S APPROVAL

6-28-06
DATE

1+00 2+00 3+00 4+00

NO.	DATE	BY	REVISIONS
4	06/08	GFR	FINAL MYLARS FOR APPROVAL
3	05/24	GFR	2ND PLAN SUBMITTAL FOR REVIEW
2	05/12	GFR	1ST PLAN SUBMITTAL FOR REVIEW
1	04/17	GFR	ORIGINAL PLAN PREPARATION

SCALE:
HORIZONTAL: 1"=50'
VERTICAL: 1"=10'

PROJ #: 2004-83
DATE: 05/12/06
DRAWN: GFR
APPROVED: SRFR

WCE
WHIPPLE CONSULTING ENGINEERS
CIVIL AND TRANSPORTATION ENGINEERING
13218 E. SPRAGUE AVENUE
SPOKANE VALLEY, WASHINGTON 99216
PH: 509-893-2617 FAX: 509-926-0227

STREET AND DRAINAGE PLANS
MICA VIEW MEADOWS
CULDESAC CURB PROFILES
SPOKANE COUNTY WASHINGTON

SHEET 6 OF 14
JOB NUMBER 2004-83

P-1957 Eng Road Drainage

CURVE TABLE				
CURVE	LENGTH	RADIUS	CHORD	DELTA ANGLE
C1	49.49	31.50	44.55	90°00'33"
C5	49.48	31.50	44.54	89°59'27"
C6	49.49	31.50	44.55	90°00'33"
C10	49.48	31.50	44.54	89°59'27"

UNDERGROUND SERVICE ALERT
ONE-CALL NUMBER
456·8000
CALL TWO BUSINESS DAYS BEFORE YOU DIG

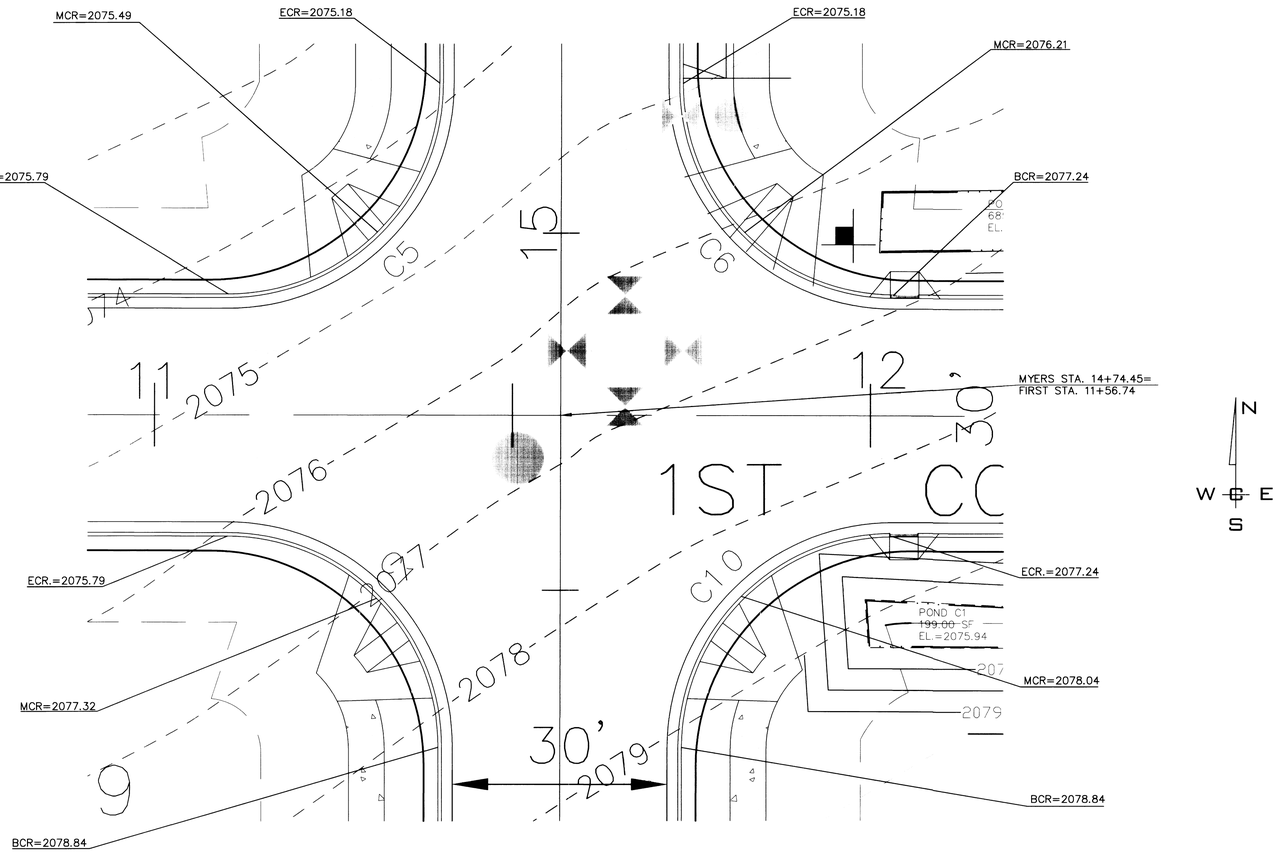

INTERSECTION DETAIL
SCALE: 1" = 10'
A
-

SPOKANE COUNTY ENGINEERS OFFICE
OFFICIAL PUBLIC DOCUMENT ORIGINAL
CONSTRUCTION PLANS
PROJECT #: P-1957
DATE ACCEPTED: 7-5-06
ACCEPTANCE EXPIRES: 7-5-08
PROJECT LANE MILES PUBLIC: 6
PROJECT LANE MILES PRIVATE: NA
CONSTRUCTION DOCUMENTATION AND CERTIFIED RECORD DRAWINGS, "AS-BUILTS" ARE REQUIRED PRIOR TO COUNTY ACCEPTANCE AND ESTABLISHMENT OF THE ROADS AND DRAINAGE FACILITIES FOR MAINTENANCE.
PERMIT REQUIRED! (509) 477-[illegible]
NOTIFY PERMIT ENGINEER 2 BUS[illegible] PRIOR TO CONSTRUCTION

SANDRA R.F. RASKELL
STATE OF WASHINGTON
REGISTERED
PROFESSIONAL ENGINEER
EXPIRES 1/15/08

COUNTY DATUM
BASED ON NORTH AMERICAN VERTICAL DATUM OF 1988 (NAVD-88), ORIGINATING FROM COUNTY BENCH MARK #57, ELEV=2051.01

DEVELOPER'S APPROVAL

6-28-06
DATE

NO.	DATE	BY	REVISIONS
4	06/08	GFR	FINAL MYLARS FOR APPROVAL
3	05/24	GFR	2ND PLAN SUBMITTAL FOR REVIEW
2	05/12	GFR	1ST PLAN SUBMITTAL FOR REVIEW
1	04/17	GFR	ORIGINAL PLAN PREPARATION

SCALE:
HORIZONTAL: 1"=10'
VERTICAL: N.A.

PROJ #: 2004-83
DATE: 05/12/06
DRAWN: GFR
APPROVED: SRFR

WCE
WHIPPLE CONSULTING ENGINEERS
CIVIL AND TRANSPORTATION ENGINEERING
13218 E. SPRAGUE AVENUE
SPOKANE VALLEY, WASHINGTON 99216
PH: 509-893-2617 FAX: 509-926-0227

STREET AND DRAINAGE PLANS
MICA VIEW MEADOWS
INTERSECTION DETAIL
SPOKANE COUNTY WASHINGTON

SHEET 7 OF 14
JOB NUMBER 2004-83

P-1957 Eng Road Drainage

NOTE: ALL AREAS AROUND CURB INLETS OR DRIVEWAY INLETS SHALL BE GRADED TO FLOW INTO THE SIDEWALK INLETS

UNDERGROUND SERVICE ALERT
ONE-CALL NUMBER
456·8000
CALL TWO BUSINESS DAYS BEFORE YOU DIG

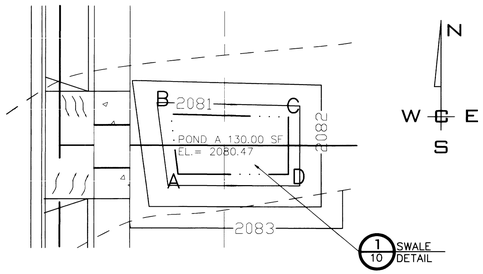

POND "A" BOTTOM LOCATION STATION & OFFSET		
POINT	STATION	OFFSET
A	MYERS STA. 13+43.62	35.53' RT.
B	MYERS STA. 13+51.98	34.49' RT.
C	MYERS STA. 13+51.62	50.94' RT.
D	MYERS STA. 13+43.62	50.94' RT.

POND "A"
FINISHED GRADE POND BOTTOM EL.=2080.47 POND BOTTOM AREA PROVIDED= 130 S.F.

POND "A" DETAIL (A/-)

SCALE: 1" = 10'

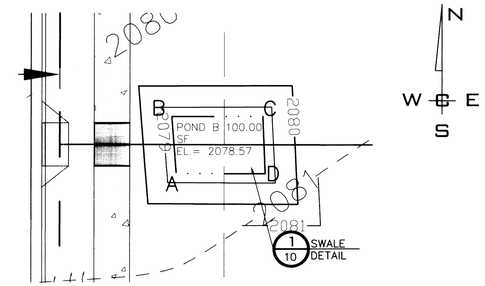

POND "A" BOTTOM LOCATION STATION & OFFSET		
POINT	STATION	OFFSET
A	MYERS STA. 13+93.63	35.31' RT.
B	MYERS STA. 14+01.61	34.68' RT.
C	MYERS STA. 14+01.61	47.39' RT.
D	MYERS STA. 13+93.63	47.73' RT.

POND "B"
FINISHED GRADE POND BOTTOM EL.=2078.57 POND BOTTOM AREA PROVIDED= 100 S.F.

POND "B" DETAIL (B/-)

SCALE: 1" = 10'

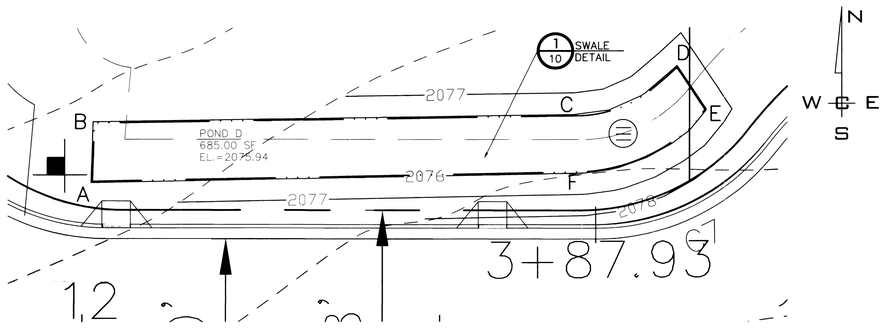

POND "D" BOTTOM LOCATION STATION & OFFSET		
POINT	STATION	OFFSET
A	1ST AVE. STA. 12+01.42	21.78' LT.
B	1ST AVE. STA. 12+01.68	30.01' LT.
C	1ST AVE. STA. 12+68.64	31.10' LT.
D	1ST AVE. STA. 12+80.45	35.20' LT.
E	1ST AVE. STA. 12+83.93	28.68' LT.
F	1ST AVE. STA. 12+70.03	23.20' LT.

POND "D"
FINISHED GRADE POND BOTTOM EL.=2075.94 POND BOTTOM AREA PROVIDED= 685 S.F. TYPE A DRYWELL RIM EL.=2076.44

POND "D" DETAIL (D/-)

SCALE: 1" = 10'

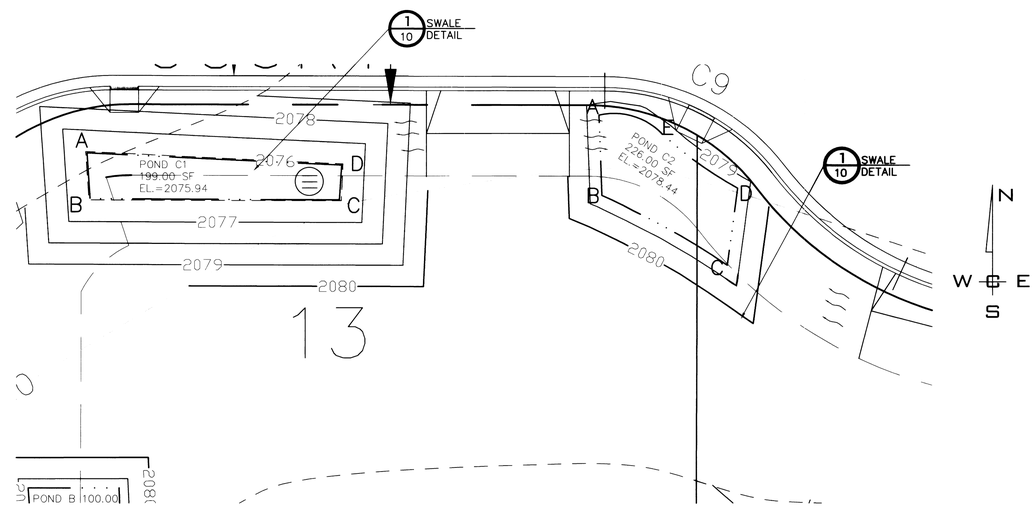

POND "C1" BOTTOM LOCATION STATION & OFFSET		
POINT	STATION	OFFSET
A	1ST STA. 11+99.52	25.88' RT.
B	1ST STA. 11+99.96	32.30' RT.
C	1ST STA. 12+34.84	32.39' RT.
D	1ST STA. 12+35.14	27.52' RT.

POND "C2" BOTTOM LOCATION STATION & OFFSET		
POINT	STATION	OFFSET
A	1ST AVE. STA. 12+71.09	20.40' RT
B	1ST AVE. STA. 12+71.53	31.69' RT
C	1ST AVE. STA. 12+89.04	41.39' RT
D	1ST AVE. STA. 12+90.47	30.63' RT
E	1ST AVE. STA. 12+80.01	23.10' RT

POND "C1" + POND "C2"
FINISHED GRADE POND BOTTOM EL.=2075.94 POND BOTTOM AREA PROVIDED= 425 S.F. TYPE A DRYWELL RIM EL.=2076.44

POND "C" DETAIL (C/-)

SCALE: 1" = 10'

SPOKANE COUNTY ENGINEERS OFFICE
OFFICIAL PUBLIC DOCUMENT ORIGINAL
CONSTRUCTION PLANS
PROJECT #: P-1957
DATE ACCEPTED: 7-5-06
ACCEPTANCE EXPIRES: 7-5-08
PROJECT LANE MILES PUBLIC: 6.1
PROJECT LANE MILES PRIVATE: N/A
CONSTRUCTION DOCUMENTATION AND CERTIFIED RECORD DRAWINGS, "AS-BUILTS" ARE REQUIRED PRIOR TO COUNTY ACCEPTANCE AND ESTABLISHMENT OF THE ROADS AND DRAINAGE FACILITIES FOR MAINTENANCE.
PERMIT REQUIRED! (509) 477-3600
NOTIFY PERMIT ENGINEER 2 BUSINESS DAYS PRIOR TO CONSTRUCTION

SANDRA R.F. RASKAL, STATE OF WASHINGTON, 29901, REGISTERED PROFESSIONAL ENGINEER
EXPIRES 1/15/07

COUNTY DATUM
BASED ON NORTH AMERICAN VERTICAL DATUM OF 1988 (NAVD-88).
ORIGINATING FROM COUNTY BENCH MARK #57, ELEV=2051.01

DEVELOPER'S APPROVAL — DATE 6-28-06

NO.	DATE	BY	REVISIONS
4	06/08	GFR	FINAL MYLARS FOR APPROVAL
3	05/24	GFR	2ND PLAN SUBMITTAL FOR REVIEW
2	05/12	GFR	1ST PLAN SUBMITTAL FOR REVIEW
1	04/17	GFR	ORIGINAL PLAN PREPARATION

SCALE: HORIZONTAL: 1"=10' VERTICAL: N.A.

PROJ #: 2004-83
DATE: 05/12/06
DRAWN: GFR
APPROVED: SRFR

WCE
WHIPPLE CONSULTING ENGINEERS
CIVIL AND TRANSPORTATION ENGINEERING
13218 E. SPRAGUE AVENUE
SPOKANE VALLEY, WASHINGTON 99216
PH: 509-893-2617 FAX: 509-926-0227

STREET AND DRAINAGE PLANS
MICA VIEW MEADOWS
POND DETAILS
SPOKANE COUNTY WASHINGTON

SHEET 8 OF 14
JOB NUMBER 2004-83

P-1957 Eng Road Drainage

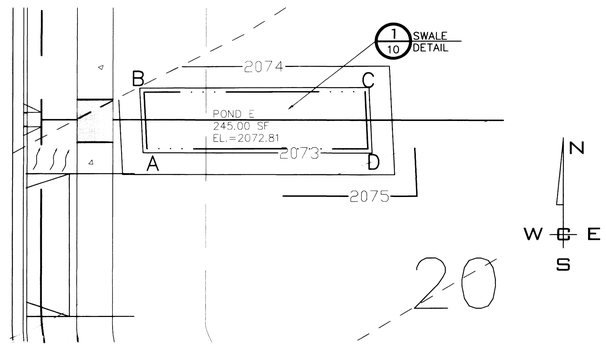

POND "E" BOTTOM LOCATION STATION & OFFSET		
POINT	STATION	OFFSET
A	MYERS STA. 15+45.15	33.34' RT
B	MYERS STA. 15+53.04	33.76' RT
C	MYERS STA. 15+53.17	64.21' RT
D	MYERS STA. 15+45.17	64.61' RT

POND "E"
FINISHED GRADE POND BOTTOM EL.=2072.81
POND BOTTOM AREA PROVIDED= 245 S.F.

POND "E" DETAIL (E/-)

SCALE: 1" = 10'

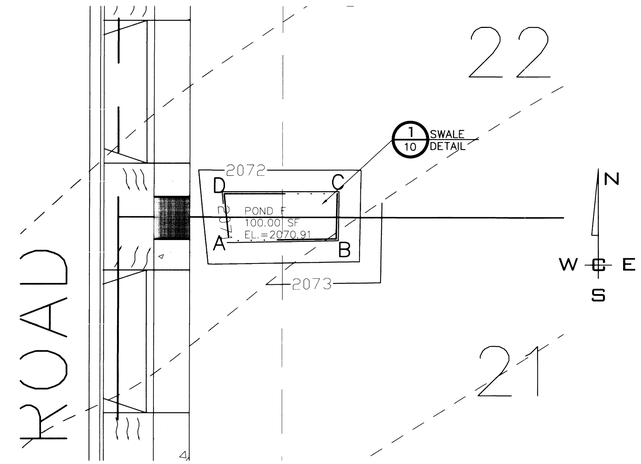

POND "F" BOTTOM LOCATION STATION & OFFSET		
POINT	STATION	OFFSET
A	MYERS STA. 15+95.86	34.25' RT
B	MYERS STA. 15+96.15	49.52' RT
C	MYERS STA. 16+02.52	49.65' RT
D	MYERS STA. 16+02.48	33.85' RT

POND "F"
FINISHED GRADE POND BOTTOM EL.=2070.91
POND BOTTOM AREA PROVIDED= 100 S.F.

POND "F" DETAIL (F/-)

SCALE: 1" = 10'

NOTE: ALL AREAS AROUND CURB INLETS OR DRIVEWAY INLETS SHALL BE GRADED TO FLOW INTO THE SIDEWALK INLETS

UNDERGROUND SERVICE ALERT
ONE-CALL NUMBER
456·8000
CALL TWO BUSINESS DAYS BEFORE YOU DIG

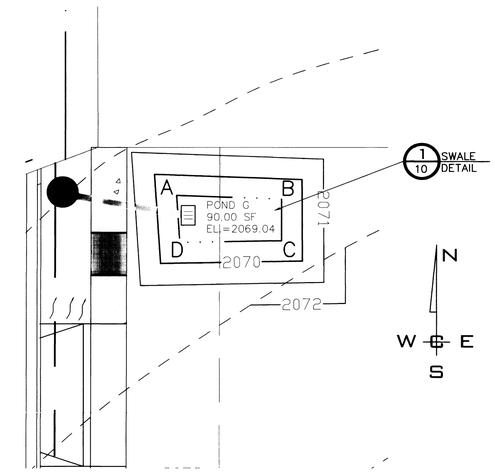

POND "G" BOTTOM LOCATION STATION & OFFSET		
POINT	STATION	OFFSET
A	MYERS STA. 16+44.68	35.96' RT
B	MYERS STA. 16+44.19	50.62' RT
C	MYERS STA. 16+38.34	50.66' RT
D	MYERS STA. 16+38.06	36.42' RT

POND "G"
FINISHED GRADE POND BOTTOM EL.=2069.04
POND BOTTOM AREA PROVIDED= 90 S.F.
TYPE 1 CATCH BASIN RIM EL.=2069.54

POND "G" DETAIL (G/-)

SCALE: 1" = 10'

NOTE: PIPE OUTLET TO DRYWELL TO BE PLACED INTO DRYWELL BARREL

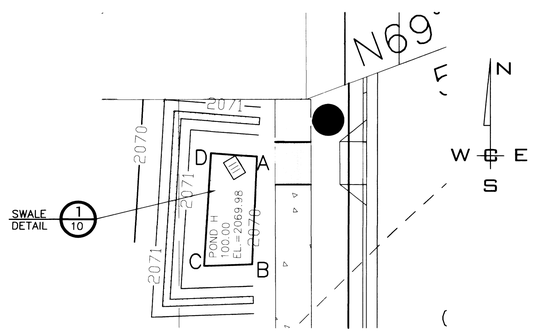

POND "H" BOTTOM LOCATION STATION & OFFSET		
POINT	STATION	OFFSET
A	MYERS STA. 16+21.15	31.84' LT.
B	MYERS STA. 16+09.59	32.46' LT.
C	MYERS STA. 16+09.34	39.11' LT.
D	MYERS STA. 16+25.08	38.19' LT.

POND "H"
FINISHED GRADE POND BOTTOM EL.=2069.98
POND BOTTOM AREA PROVIDED= 100 S.F.
TYPE 1 CATCH BASIN RIM EL.=2070.48
TOP OF BERM EL= 2071.48

POND "H" DETAIL (H/-)

SCALE: 1" = 10'

NOTE: PIPE OUTLET TO DRYWELL TO BE PLACED INTO DRYWELL BARREL

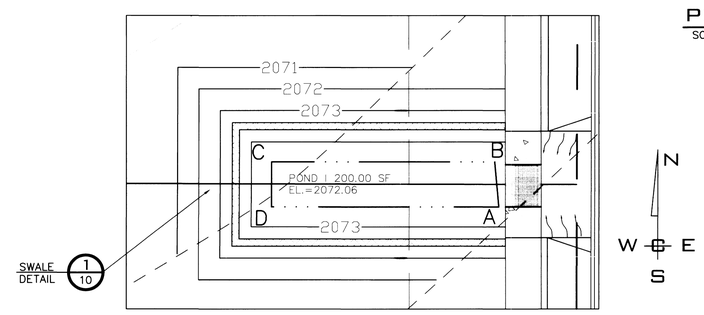

POND "I" BOTTOM LOCATION STATION & OFFSET		
POINT	STATION	OFFSET
A	MYERS STA. 15+65.77	29.93' LT.
B	MYERS STA. 15+72.13	30.50' LT.
C	MYERS STA. 15+72.06	61.65' LT.
D	MYERS STA. 15+65.70	61.65' LT.

POND "I"
FINISHED GRADE POND BOTTOM EL.=2072.06
POND BOTTOM AREA PROVIDED= 200 S.F.
TOP OF BERM EL= 2073.56

POND "I" DETAIL (I/-)

SCALE: 1" = 10'

SPOKANE COUNTY ENGINEERS OFFICE
OFFICIAL PUBLIC DOCUMENT ORIGINAL
CONSTRUCTION PLANS
PROJECT #: P-1957
DATE ACCEPTED: 7-5-06
ACCEPTANCE EXPIRES: 7-5-08
PROJECT LANE MILES PUBLIC: 61
PROJECT LANE MILES PRIVATE: N/A
CONSTRUCTION DOCUMENTATION AND CERTIFIED RECORD DRAWINGS, "AS-BUILTS" ARE REQUIRED PRIOR TO COUNTY ACCEPTANCE AND ESTABLISHMENT OF THE ROADS AND DRAINAGE FACILITIES FOR MAINTENANCE.
PERMIT REQUIRED! (509) 477-3600
NOTE: PERMIT ENGINEER 2 BUSINESS DAYS PRIOR TO CONSTRUCTION

SANDRA R.F. RASKEN — STATE OF WASHINGTON — REGISTERED PROFESSIONAL ENGINEER — 21806
EXPIRES 1/15/08

COUNTY DATUM
BASED ON NORTH AMERICAN VERTICAL DATUM OF 1988 (NAVD-88).
ORIGINATING FROM COUNTY BENCH MARK #57. ELEV=2051.01

DEVELOPER'S APPROVAL — DATE 6-28-06

NO.	DATE	BY	REVISIONS
4	06/08	GFR	FINAL MYLARS FOR APPROVAL
3	05/24	GFR	2ND PLAN SUBMITTAL FOR REVIEW
2	05/12	GFR	1ST PLAN SUBMITTAL FOR REVIEW
1	04/17	GFR	ORIGINAL PLAN PREPARATION

SCALE: HORIZONTAL: 1"=10' VERTICAL: N.A.

PROJ #: 2004-83
DATE: 05/12/06
DRAWN: GFR
APPROVED: SRFR

WCE
WHIPPLE CONSULTING ENGINEERS
CIVIL AND TRANSPORTATION ENGINEERING
13218 E. SPRAGUE AVENUE
SPOKANE VALLEY, WASHINGTON 99216
PH: 509-893-2617 FAX: 509-926-0227

STREET AND DRAINAGE PLANS
MICA VIEW MEADOWS
POND DETAILS
SPOKANE COUNTY WASHINGTON

SHEET 9 OF 14
JOB NUMBER 2004-83

P-1957 Eng Road Drainage

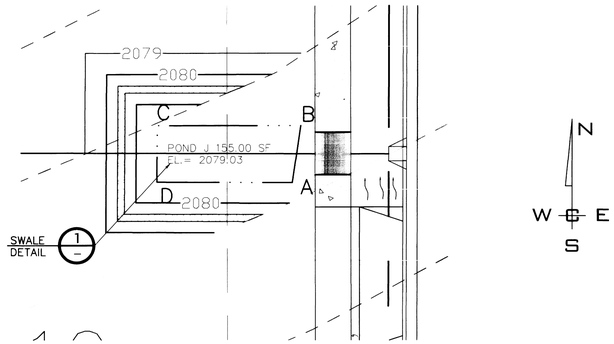

POND "J" BOTTOM LOCATION STATION & OFFSET		
POINT	STATION	OFFSET
A	MYERS STA. 13+81.36	31.43' LT.
B	MYERS STA. 13+89.33	30.26' LT.
C	MYERS STA. 13+89.33	50.32' LT.
D	MYERS STA. 13+81.36	50.32' LT.

POND "J"
FINISHED GRADE POND BOTTOM EL.=2079.03
POND BOTTOM AREA PROVIDED= 155 S.F.
TOP OF BERM EL= 2080.53

POND "J" DETAIL

SCALE: 1" = 10'

J
-

NOTE: ALL AREAS AROUND CURB INLETS OR DRIVEWAY INLETS SHALL BE GRADED TO FLOW INTO THE SIDEWALK INLETS

UNDERGROUND SERVICE ALERT
ONE-CALL NUMBER
456·8000
CALL TWO BUSINESS DAYS BEFORE YOU DIG

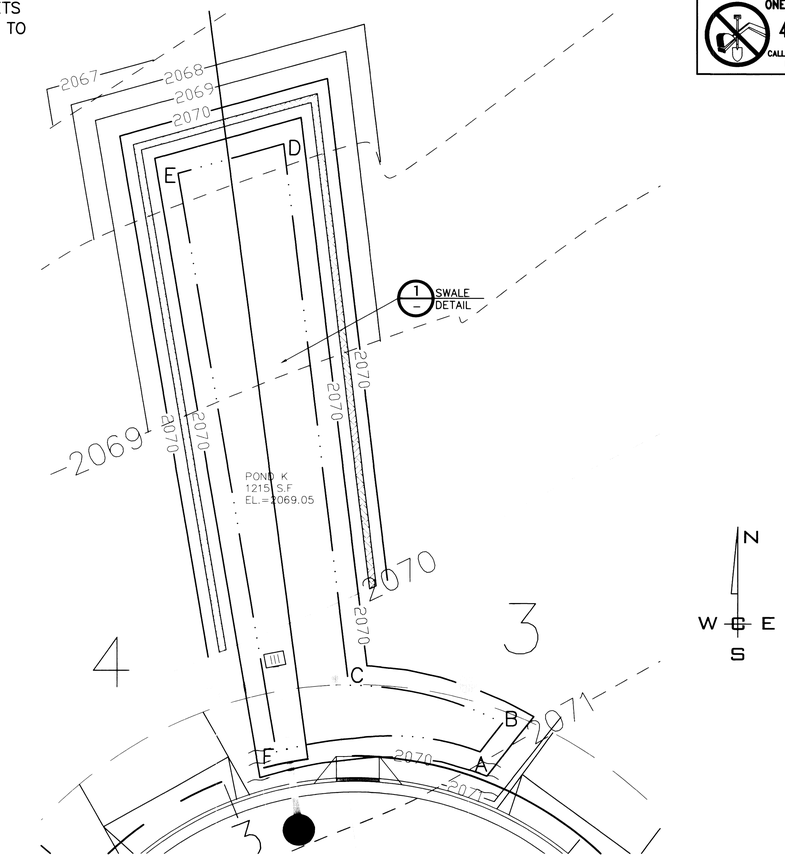

POND "K" BOTTOM LOCATION STATION & OFFSET		
POINT	STATION	OFFSET
A	W CULDESAC STA. 3+33.34	6.65' LT.
B	W CULDESAC STA. 3+34.69	11.38' LT.
C	W CULDESAC STA. 3+17.01	12.91' LT.
D	W CULDESAC STA. 3+14.24	89.18' LT.
E	W CULDESAC STA. 3+08.96	87.02' LT.
F	W CULDESAC STA. 3+07.65	4.77' LT.

POND "K"
FINISHED GRADE POND BOTTOM EL.=2069.05
POND BOTTOM AREA PROVIDED= 1075 S.F.
TYPE 1 CATCH BASIN RIM EL.=2069.55
TOP OF BERM EL= 2070.55

NOTE: STATIONING FOR CUL-DE-SAC IS OFF THE TOP BACK OF CURB.

POND "K" DETAIL

SCALE: 1" = 10'

K
-

NOTE: PIPE OUTLET TO DRYWELL TO BE PLACED INTO DRYWELL BARREL

NOTE:
ORGANIC CARBON TESTING IS REQUIRED FOR THE TOPSOIL IF THE DRYWELL GRATE IS GREATER THAN 0.5' ABOVE SOD

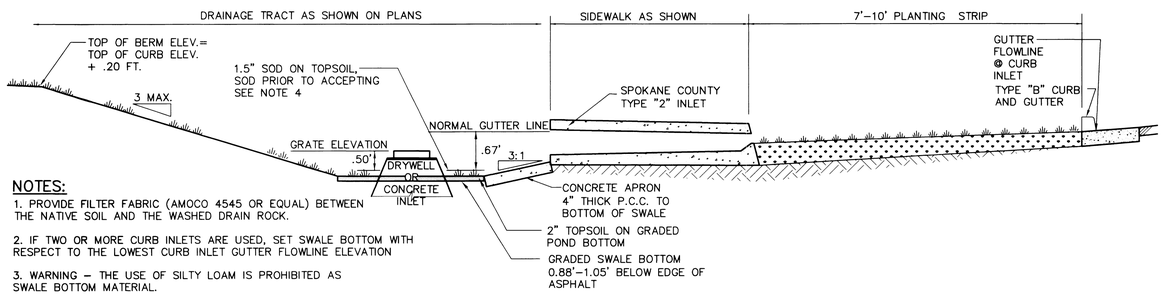

NOTES:

1. PROVIDE FILTER FABRIC (AMOCO 4545 OR EQUAL) BETWEEN THE NATIVE SOIL AND THE WASHED DRAIN ROCK.
2. IF TWO OR MORE CURB INLETS ARE USED, SET SWALE BOTTOM WITH RESPECT TO THE LOWEST CURB INLET GUTTER FLOWLINE ELEVATION
3. WARNING – THE USE OF SILTY LOAM IS PROHIBITED AS SWALE BOTTOM MATERIAL.
4. IRRIGATION IS REQUIRED FOR SOD INSTALLATION.

TYPE "B"- CURB-PLANTING STRIP-TYPE 1 & 2 INLET-208 SWALE WITH DRYWELL

NOT TO SCALE

1
-

SPOKANE COUNTY ENGINEERS OFFICE
OFFICIAL PUBLIC DOCUMENT ORIGINAL
CONSTRUCTION PLANS
PROJECT #: P-1957
DATE ACCEPTED: 7-5-06
ACCEPTANCE EXPIRES: 7-5-08
PROJECT LANE MILES PUBLIC: 61
PROJECT LANE MILES PRIVATE: N/A
CONSTRUCTION DOCUMENTATION AND CERTIFIED RECORD DRAWINGS, "AS-BUILTS" ARE REQUIRED PRIOR TO COUNTY ACCEPTANCE AND ESTABLISHMENT OF THE ROADS AND DRAINAGE FACILITIES FOR MAINTENANCE.
PERMIT REQUIRED! (509) 477-3000
NOTIFY PERMIT ENGINEER 2 BUSINESS DAYS PRIOR TO CONSTRUCTION

SANDRA R.F. RASKOB
STATE OF WASHINGTON
29501
REGISTERED PROFESSIONAL ENGINEER
EXPIRES 1/15/08

COUNTY DATUM
BASED ON NORTH AMERICAN VERTICAL DATUM OF 1988 (NAVD-88).
ORIGINATING FROM COUNTY BENCH MARK #57, ELEV=2051.01

DEVELOPER'S APPROVAL — DATE 6-28-06

NO	DATE	BY	REVISIONS
4	06/08	GFR	FINAL MYLARS FOR APPROVAL
3	05/24	GFR	2ND PLAN SUBMITTAL FOR REVIEW
2	05/12	GFR	1ST PLAN SUBMITTAL FOR REVIEW
1	04/17	GFR	ORIGINAL PLAN PREPARATION

SCALE: HORIZONTAL: 1"=10' VERTICAL: N.A.

PROJ #: 2004-83
DATE: 05/12/06
DRAWN: GFR
APPROVED: SRFR

WCE
WHIPPLE CONSULTING ENGINEERS
CIVIL AND TRANSPORTATION ENGINEERING
13218 E. SPRAGUE AVENUE
SPOKANE VALLEY, WASHINGTON 99216
PH: 509-893-2617 FAX: 509-926-0227

STREET AND DRAINAGE PLANS
MICA VIEW MEADOWS
COVER SHEET
SPOKANE COUNTY WASHINGTON

SHEET 10 OF 14
JOB NUMBER 2004-83

P-1957 Eng Lead - Drainage

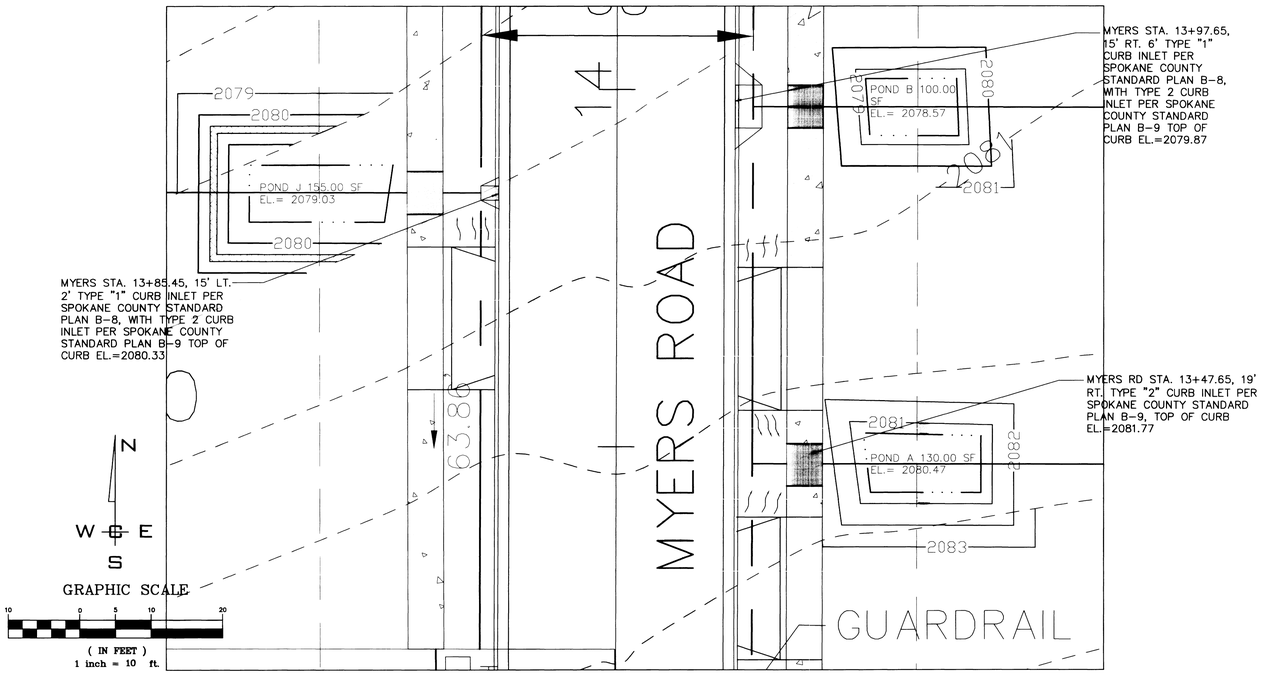

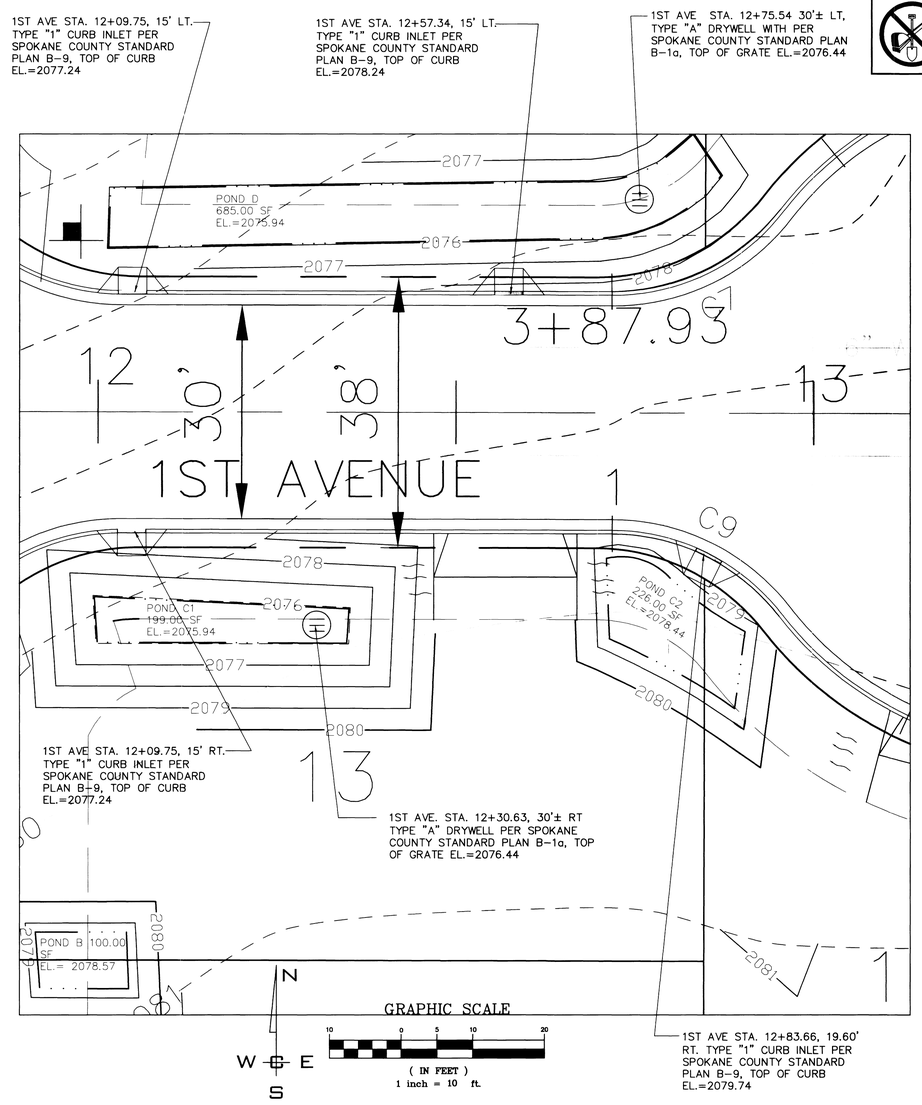

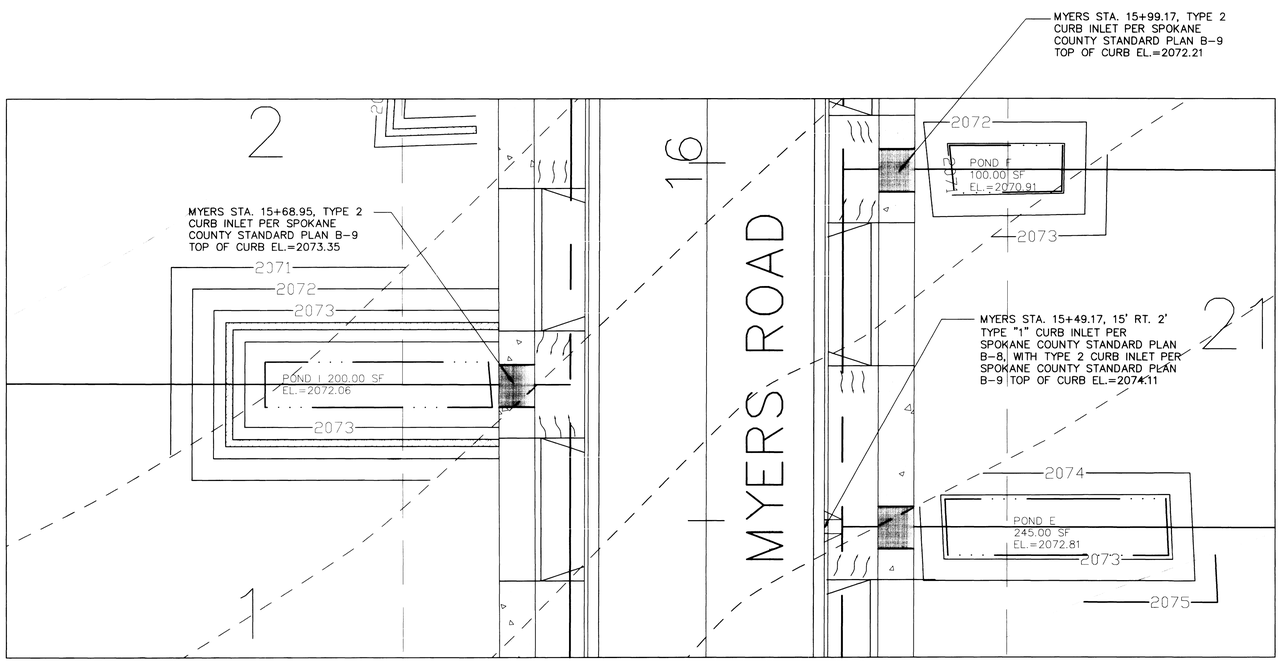

UNDERGROUND SERVICE ALERT
ONE-CALL NUMBER
456·8000
CALL TWO BUSINESS DAYS BEFORE YOU DIG

SPOKANE COUNTY ENGINEERS OFFICE
OFFICIAL PUBLIC DOCUMENT ORIGINAL
CONSTRUCTION PLANS
PROJECT #: P-1957
DATE ACCEPTED: 7-5-06
ACCEPTANCE EXPIRES: 7-5-08
PROJECT LANE MILES PUBLIC: 1.61
PROJECT LANE MILES PRIVATE: N/A
CONSTRUCTION DOCUMENTATION AND CERTIFIED RECORD DRAWINGS, "AS-BUILTS" ARE REQUIRED PRIOR TO COUNTY ACCEPTANCE AND ESTABLISHMENT OF THE ROADS AND DRAINAGE FACILITES FOR MAINTENANCE.
PERMIT REQUIRED! (509) 477-3600
NOTIFY PERMIT ENGINEER 2 BUSINESS DAYS PRIOR TO CONSTRUCTION

SANDRA R.F. RASKEB
STATE OF WASHINGTON
19901
REGISTERED PROFESSIONAL ENGINEER
7/6/06
EXPIRES 1/15/08

COUNTY DATUM
BASED ON NORTH AMERICAN VERTICAL DATUM OF 1988 (NAVD-88), ORIGINATING FROM COUNTY BENCH MARK #57. ELEV=2051.01

DEVELOPER'S APPROVAL — DATE 6-28-06

NO.	DATE	BY	REVISIONS
4	06/08	GFR	FINAL MYLARS FOR APPROVAL
3	05/24	GFR	2ND PLAN SUBMITTAL FOR REVIEW
2	05/12	GFR	1ST PLAN SUBMITTAL FOR REVIEW
1	04/17	GFR	ORIGINAL PLAN PREPARATION

SCALE: HORIZONTAL: 1"=10' VERTICAL: N.A.

PROJ #: 2004-83
DATE: 05/12/06
DRAWN: GFR
APPROVED: SRFR

WCE
WHIPPLE CONSULTING ENGINEERS
CIVIL AND TRANSPORTATION ENGINEERING
13218 E. SPRAGUE AVENUE
SPOKANE VALLEY, WASHINGTON 99216
PH: 509-893-2617 FAX: 509-926-0227

STREET AND DRAINAGE PLANS
MICA VIEW MEADOWS
COVER SHEET
SPOKANE COUNTY WASHINGTON

SHEET 11 OF 14
JOB NUMBER 2004-83

P-1957 Eng Road Drainage

UNDERGROUND SERVICE ALERT
ONE-CALL NUMBER
456·8000
CALL TWO BUSINESS DAYS BEFORE YOU DIG

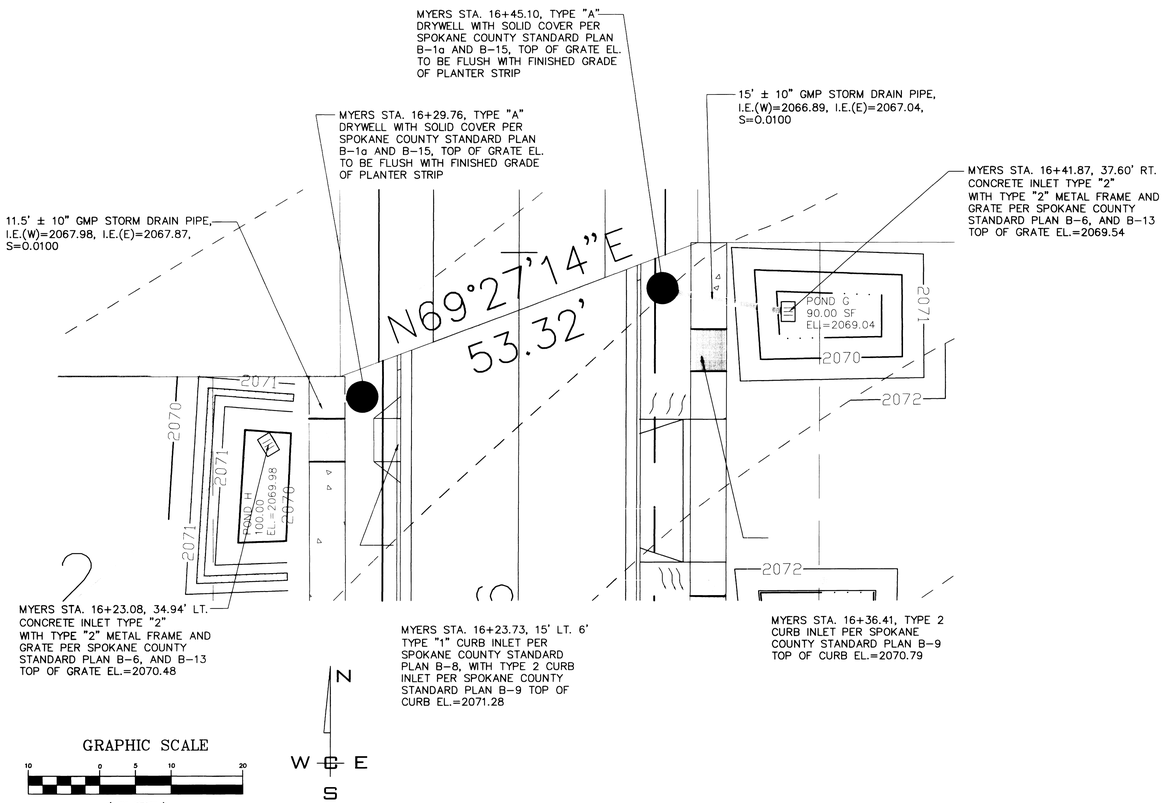

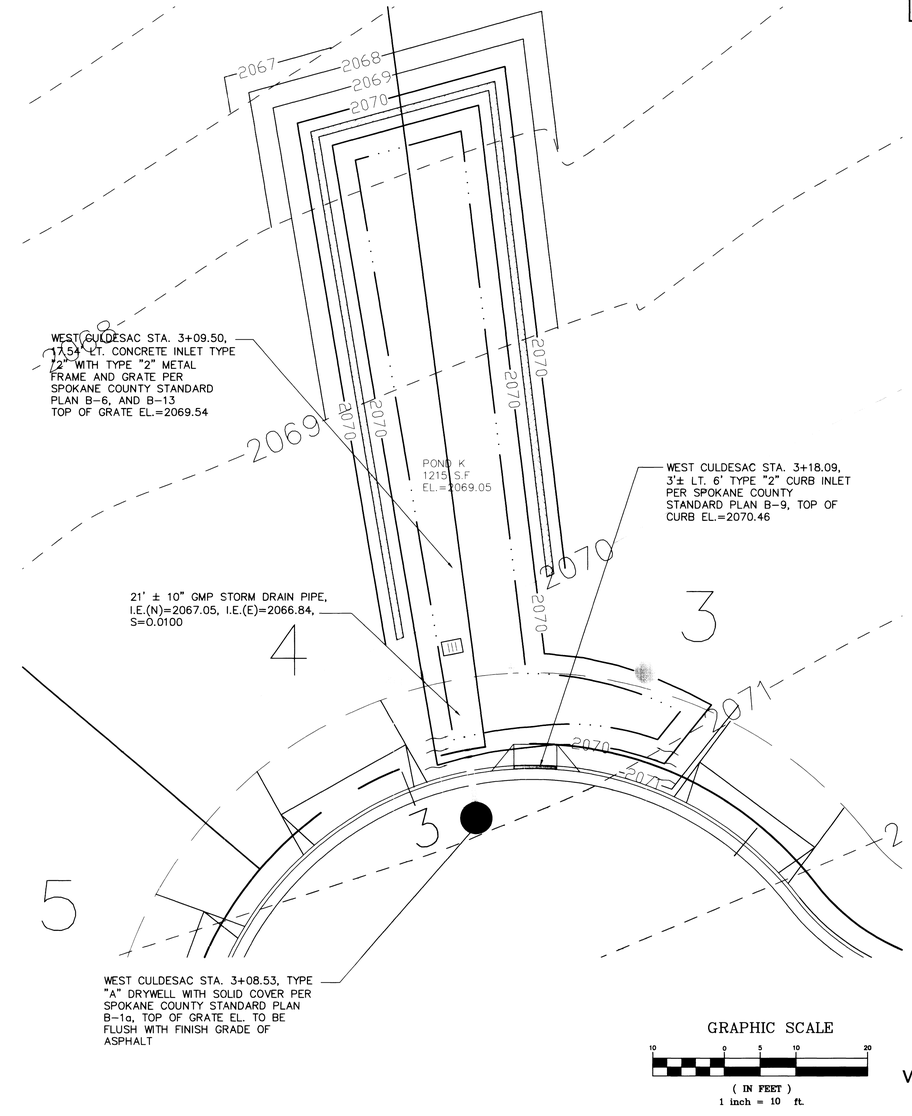

SPOKANE COUNTY ENGINEERS OFFICE
OFFICIAL PUBLIC DOCUMENT ORIGINAL
CONSTRUCTION PLANS
PROJECT #: P-1957
DATE ACCEPTED: 7-5-06
ACCEPTANCE EXPIRES: 7-5-08
PROJECT LANE MILES PUBLIC: .61
PROJECT LANE MILES PRIVATE: N/A
CONSTRUCTION DOCUMENTATION AND CERTIFIED RECORD DRAWINGS, "AS-BUILTS" ARE REQUIRED PRIOR TO COUNTY ACCEPTANCE AND ESTABLISHMENT OF THE ROADS AND DRAINAGE FACILITIES FOR MAINTENANCE.
PERMIT REQUIRED! (509) 477-3300
NOTIFY PERMIT ENGINEER 2 BUSINESS DAYS PRIOR TO CONSTRUCTION

SANDRA R. P. BASKELL
STATE OF WASHINGTON
REGISTERED PROFESSIONAL ENGINEER
6/19/06
EXPIRES 1/15/08

COUNTY DATUM
BASED ON NORTH AMERICAN VERTICAL DATUM OF 1988 (NAVD-88), ORIGINATING FROM COUNTY BENCH MARK #57. ELEV=2051.01

DEVELOPER'S APPROVAL — DATE 6-28-06

NO.	DATE	BY	REVISIONS
4	06/08	GFR	FINAL MYLARS FOR APPROVAL
3	05/24	GFR	2ND PLAN SUBMITTAL FOR REVIEW
2	05/12	GFR	1ST PLAN SUBMITTAL FOR REVIEW
1	04/17	GFR	ORIGINAL PLAN PREPARATION

SCALE:
HORIZONTAL: 1"=10'
VERTICAL: N.A.

PROJ #: 2004-83
DATE: 05/12/06
DRAWN: GFR
APPROVED: SRFR

WCE
WHIPPLE CONSULTING ENGINEERS
CIVIL AND TRANSPORTATION ENGINEERING
13218 E. SPRAGUE AVENUE
SPOKANE VALLEY, WASHINGTON 99216
PH. 509-893-2617 FAX: 509-926-0227

STREET AND DRAINAGE PLANS
MICA VIEW MEADOWS
DRAINAGE DETAILS
SPOKANE COUNTY WASHINGTON

SHEET 12 OF 14
JOB NUMBER 2004-83

P-1957 Eng Road-Drainage

EROSION CONTROL PLANS

MICA VIEW MEADOWS

SPOKANE COUNTY, WASHINGTON

N 1/2 OF THE N 1/2 OF THE NE. 1/4 S. 20, T. 25 N., R. 45 E., W.M.

UNDERGROUND SERVICE ALERT
ONE-CALL NUMBER
456·8000
CALL TWO BUSINESS DAYS BEFORE YOU DIG

GENERAL NOTES

1. ALL MATERIALS, WORKMANSHIP, AND CONSTRUCTION OF SITE IMPROVEMENTS SHALL MEET OR EXCEED SITE WORK STANDARDS AND THE STANDARDS AND SPECIFICATIONS SET FORTH IN THE CITY OF SPOKANE VALLEY REGULATIONS AND APPLICABLE STATE AND FEDERAL REGULATIONS. WHERE THERE IS CONFLICT BETWEEN THESE PLANS AND THE SPECIFICATIONS, OR ANY APPLICABLE STANDARDS, THE HIGHER QUALITY STANDARD SHALL APPLY. ALL WORK WITHIN PUBLIC R.O.W. OR EASEMENTS SHALL BE INSPECTED AND APPROVED BY THE CITY OF SPOKANE VALLEY INSPECTOR. INSPECTION SERVICES AND CONSTRUCTION CERTIFICATION TO BE PROVIDED BY DESIGNEE OF PROJECT SPONSOR/OWNER.

2. THE CONTRACTOR IS SPECIFICALLY CAUTIONED THAT THE LOCATION AND/OR ELEVATION OF EXISTING UTILITIES, AS SHOWN ON THESE PLANS, IS BASED ON RECORDS OF THE VARIOUS UTILITY COMPANIES AND, WHERE POSSIBLE, MEASUREMENTS TAKEN IN THE FIELD. THE INFORMATION IS NOT TO BE RELIED UPON AS BEING EXACT OR COMPLETE. THE CONTRACTOR MUST CALL THE LOCAL UTILITY LOCATION CENTER AT LEAST 48 HOURS BEFORE ANY EXCAVATION TO REQUEST EXACT FIELD LOCATIONS OF EXISTING UTILITIES. THE CONTRACTOR SHALL VERIFY PERTINENT LOCATIONS AND ELEVATIONS, ESPECIALLY AT THE CONNECTION POINTS AND AT POTENTIAL UTILITY CONFLICTS. IT SHALL BE THE RESPONSIBILITY OF THE CONTRACTOR TO RELOCATE ALL EXISTING UTILITIES THAT CONFLICT WITH THE PROPOSED IMPROVEMENTS SHOWN ON THESE PLANS.

3. THE CONTRACTOR SHALL BE RESPONSIBLE FOR OBTAINING ALL NECESSARY PERMITS FROM ALL APPLICABLE AGENCIES. THE CONTRACTOR SHALL NOTIFY THE CITY OF SPOKANE VALLEY INSPECTOR AT LEAST 48 HOURS PRIOR TO THE START OF ANY EARTH DISTURBING ACTIVITY OR CONSTRUCTION ON ANY AND ALL PUBLIC IMPROVEMENTS.

4. THE CONTRACTOR SHALL COORDINATE AND COOPERATE WITH THE CITY OF SPOKANE VALLEY AND ALL UTILITY COMPANIES WITH REGARD TO RELOCATIONS OR ADJUSTMENTS OF EXISTING UTILITIES DURING CONSTRUCTION AND TO ASSURE THAT THE WORK IS ACCOMPLISHED IN A TIMELY FASHION AND WITH A MINIMUM DISRUPTION OF SERVICE. THE CONTRACTOR SHALL BE RESPONSIBLE FOR CONTACTING ALL PARTIES AFFECTED BY ANY DISRUPTION OF ANY UTILITY SERVICE.

5. THE CONTRACTOR SHALL HAVE ONE (1) SIGNED COPY OF THE APPROVED PLANS, ONE (1) COPY OF THE APPROPRIATE STANDARDS AND SPECIFICATIONS, AND A COPY OF ANY PERMITS AND EXTENSION AGREEMENTS NEEDED FOR THE JOB ON-SITE AT ALL TIMES.

6. THE CONTRACTOR SHALL BE RESPONSIBLE FOR ALL ASPECTS OF SAFETY INCLUDING, BUT NOT LIMITED TO, EXCAVATION, TRENCHING, SHORING, TRAFFIC CONTROL, AND SECURITY.

7. IF, DURING THE CONSTRUCTION PROCESS, CONDITIONS ARE ENCOUNTERED BY THE CONTRACTOR, HIS SUBCONTRACTORS, OR OTHER AFFECTED PARTIES, WHICH COULD INDICATE A SITUATION THAT IS NOT IDENTIFIED IN THE PLANS OR SPECIFICATIONS, THE CONTRACTOR SHALL CONTACT THE ENGINEER IMMEDIATELY.

8. ALL REFERENCES TO ANY PUBLISHED STANDARDS SHALL REFER TO THE LATEST REVISION OF SAID STANDARD, UNLESS SPECIFICALLY STATED OTHERWISE.

9. FOR WORK AFFECTING PUBLIC ROADWAYS OR IF REQUIRED BY AND THE CITY OF SPOKANE VALLEY THE CONTRACTOR SHALL SUBMIT A TRAFFIC CONTROL AND PHASING PLAN, IN ACCORDANCE WITH M.U.T.C.D. FOR APPROVAL PRIOR TO ANY CONSTRUCTION ACTIVITIES WITHIN OR AFFECTING THE RIGHT-OF-WAY, THE CONTRACTOR SHALL BE RESPONSIBLE FOR PROVIDING ANY AND ALL TRAFFIC CONTROL DEVICES AS MAY BE REQUIRED BY SAID PLANS. PRIOR TO INSTALLATION AND PRECONSTRUCTION CONFERENCE SHALL BE HELD WITH THE CITY OF SPOKANE VALLEY.

10. THE CONTRACTOR IS RESPONSIBLE FOR PROVIDING ALL LABOR AND MATERIALS NECESSARY FOR THE COMPLETION OF THE INTENDED IMPROVEMENTS SHOWN ON THESE DRAWINGS OR DESIGNATED TO BE PROVIDED, INSTALLED, CONSTRUCTED, REMOVED OR RELOCATED UNLESS SPECIFICALLY NOTED OTHERWISE.

11. PER AGENCY STANDARDS THE CONTRACTOR SHALL BE RESPONSIBLE FOR KEEPING ROADWAYS FREE AND CLEAR OF ALL CONSTRUCTION DEBRIS AND DIRT TRACKED FROM THE SITE.

12. THE CONTRACTOR SHALL BE RESPONSIBLE FOR RECORDING RECORD INFORMATION ON A SET OF RECORD DRAWINGS KEPT AT THE CONSTRUCTION SITE AND AVAILABLE TO THE AND THE CITY OF SPOKANE VALLEY INSPECTOR AT ALL TIMES.

13. DIMENSIONS FOR LAYOUT AND CONSTRUCTION ARE NOT TO BE SCALED FROM ANY DRAWING. FOR ADDITIONAL INFORMATION CONTACT THE ENGINEER FOR CLARIFICATION AND NOTE ON THE RECORD DRAWINGS.

14. ALL EROSION AND SEDIMENT CONTROL (E.S.C.) MEASURES SHALL BE INSTALLED AT THE LIMITS OF CONSTRUCTION PRIOR TO GROUND-DISTURBING ACTIVITY. ALL E.S.C. MEASURES SHALL BE MAINTAINED IN GOOD REPAIR BY THE CONTRACTOR UNTIL SUCH TIME AS THE ENTIRE DISTURBED AREAS ARE STABILIZED WITH HARD SURFACE OR LANDSCAPING.

15. THE CONTRACTOR SHALL SEQUENCE INSTALLATION OF UTILITIES IN SUCH A MANNER AS TO MINIMIZE POTENTIAL UTILITY CONFLICTS. IN GENERAL, STORM SEWER AND SANITARY SEWER SHOULD BE CONSTRUCTED PRIOR TO INSTALLATION OF WATER LINES AND DRY UTILITIES. IT IS THE RESPONSIBILITY OF THE CONTRACTOR TO COORDINATE ALL UTILITY RELOCATIONS CONSISTENT WITH THE CONTRACTORS SCHEDULE FOR THIS PROJECT, WHETHER SHOWN OR NOT SHOWN, AS IT RELATES TO THE CONSTRUCTION ACTIVITIES CONTEMPLATED IN THESE PLANS.

16. ALL WORK WITHIN THE PUBLIC RIGHT-OF-WAY IS SUBJECT TO THE JURISDICTION OF THE CITY OF SPOKANE VALLEY ENGINEERING DEPARTMENT STANDARD DETAILS AND SPECIFICATIONS.

17. ALL CONSTRUCTION OPERATIONS , INCLUDING THE WARMING UP, REPAIR, ARRIVAL, DEPARTURE OR RUNNING OF TRUCKS, EARTH MOVING EQUIPMENT, CONSTRUCTION EQUIPMENT AND ANY OTHER ASSOCIATED EQUIPMENT SHALL GENERALLY BE LIMITED TO THE TIME PERIOD APPROVED BY THE CITY OF SPOKANE VALLEY.

18. BASED ON A REQUIREMENT FROM THE CITY OF SPOKANE VALLEY THE ENGINEER OR HIS DESIGNEE SHALL PERFORM MATERIALS TESTING AND QUALITY CONTROL ON THE PROJECT AND SHALL SUBMIT COPIES OF DAILY REPORTS, TEST REPORTS, PROJECT CERTIFICATION AND RECORD DRAWINGS TO THE CITY OF SPOKANE VALLEY ENGINEER.

19. NO REVISIONS SHALL BE MADE TO THESE PLANS WITHOUT THE APPROVAL BY THE CITY OF SPOKANE VALLEY ENGINEER AND NOTIFICATION OF THE ENGINEER OF RECORD.

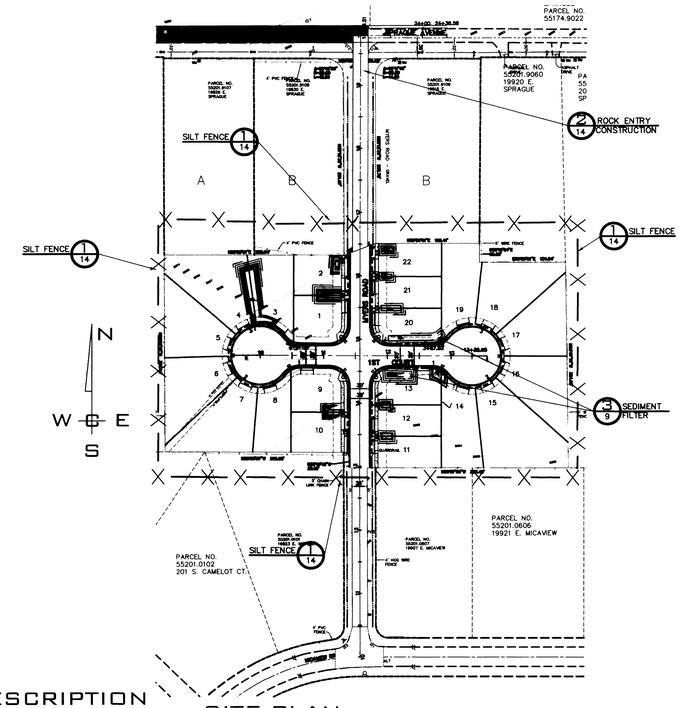

SITE PLAN
NOT TO SCALE

LEGAL DESCRIPTION

LOT D OF SHORT PLAT 93-870, AUDITORS #9411010326, BEING A PORTION OF THE NORTH 1/2 OF NORTH 1/2 OF NORTH EAST 1/4 OF SECTION 20, TOWNSHIP 25, RANGE 45, W.M.

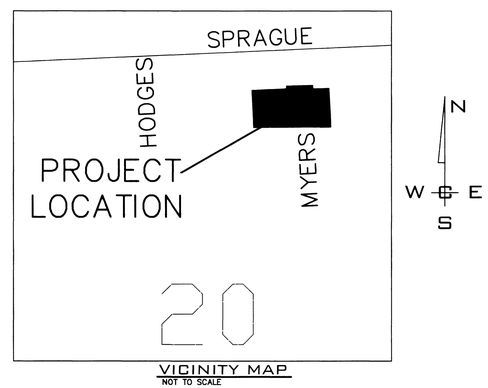

VICINITY MAP
NOT TO SCALE

EROSION & SEDIMENT CONTROL GENERAL NOTES AND INFORMATION

1. AN EROSION/SEDIMENT CONTROL (E.S.C.) PLAN IS REQUIRED FOR THIS PROJECT. IMPLEMENTATION OF THE **E.S.C. PLAN**, AND CONSTRUCTION, MAINTENANCE, AND UPGRADING OF THE **E.S.C.** FACILITIES ARE THE RESPONSIBILITY OF THE DEVELOPER UNTIL ALL CONSTRUCTION IS COMPLETED AND ACCEPTED BY **SPOKANE COUNTY**, OR UNTIL VEGETATION IS ESTABLISHED THROUGHOUT THE SITE, AND ACCEPTED BY **SPOKANE COUNTY**, WHICHEVER IS LATER.
2. APPROVAL OF THE **E.S.C. PLAN** DOES NOT CONSTITUTE APPROVAL OF ANY OF THE PROPOSED ROAD, STORM DRAINAGE, GRADING OR UTILITY DESIGN ELEMENTS SHOWN ON THE **E.S.C. PLAN**.
3. THE EROSION/SEDIMENT CONTROL MEASURES SHOWN ARE THE MINIMUM REQUIREMENTS FOR THE ANTICIPATED SITE CONDITIONS. THE CONTRACTOR SHALL INSPECT AND MAINTAIN THESE **E.S.C.** MEASURES DAILY, AND SHALL MAINTAIN AND UPGRADE THESE MEASURES AS NECESSARY TO PREVENT SEDIMENT-LADEN WATER FROM EITHER FLOWING OFF SITE, OR INTO NEW/EXISTING STORM DRAINAGE FACILITIES, SUCH AS DRYWELLS, CULVERTS, OR GRAVEL GALLERIES.
4. GEOTEXTILE FABRIC IS TO BE PLACED ON THE RIMS, CATCH BASINS AND INLETS UNTIL SUCH TIME THAT THE VEGETATION ON THE SITE IS ESTABLISHED AND THE THREAT OF SEDIMENT DEPOSITION INTO THE DRAINAGE SYSTEM IS MITIGATED.
5. THE SILT FENCES SHALL BE INSTALLED BY THE CONTRACTOR PRIOR TO OTHER SITE WORK, AND MAINTAINED THROUGHOUT THE DURATION OF CONSTRUCTION.
6. THE CONTRACTOR IS RESPONSIBLE FOR INSTALLING ROCK CONSTRUCTION ENTRIES AT ANY AND ALL LOCATIONS USED TO ENTER OR EXIT THE PROJECT SITE. SEE DETAIL 2 SHEET 14.
7. THE CONTRACTOR IS RESPONSIBLE FOR DESIGNATING A LOCATION WHERE CONCRETE TRUCKS AND EQUIPMENT CAN BE WASHED OUT, NOT LOCATED NEAR OR DRAINING INTO A STORM DRAINAGE AREA.
8. PROPERTY OWNER: MIKE SCHMITZ 509-462-9313
   CONTACT PERSON ON SITE: MIKE SCHMITZ
9. PROJECT LOCATION: N 1/2 OF THE N 1/2 OF THE NE. 1/4 S. 20, T. 25 N., R. 45 E., W.M..
10. PROJECT DESCRIPTION: MICA VIEW MEADOWS IS A RESIDENTIAL SUBDIVISION CONSISTING OF 22 LOTS AND WILL REQUIRE CONSTRUCTION OF ROADS AND STORM DRAINAGE. THE IMPROVEMENTS CONSIST OF APPROXIMATELY 2650 LINEAR FEET OF DRAINAGE AND ELECTRICAL FACILITIES. 2650 LINEAR FEET OF NEW ASPHALT ROADWAY AND ASSOCIATED STORM DRAINAGE.
11. DESCRIPTION OF E.S.C. MEASURES: USE OF SILT FENCES AND ROCK CONSTRUCTION ENTRANCES. ALL E.S.C. MEASURES MENTIONED ABOVE ARE TEMPORARY AND WILL BE REMOVED AFTER YARDS ARE LANDSCAPED.
12. EXISTING VEGETATION: FIELD GRASS AND WEEDS
13. PLAN PREPARATION DATE: MAY 10, 2006
14. SOILS: ON SITE SOILS; GARRISON GRAVELLY LOAM (GgA)
15. **STABLIZATION OF DENUDED AREAS:**
    ANY DISTURBED AREAS, WHICH WOULD BE LEFT BARE FOR MORE THAN 7 DAYS AND ARE NOT INTENDED TO BE REWORKED WITHIN 30-45 DAYS SHALL BE SEEDED WITH A FAST STARTING NATIVE DRYLAND GRASS SUCH AS ANNUAL RYE, OR APPROVED EQUAL, AT A RATE OF 60 lbs/ACRE.
16. **CONTROL OF POLLUTANTS:**
    ANY SPILLS WILL BE HANDLED ACCORDING TO D.O.E. AND D.O.H. GUIDELINES.
17. **LIMITS OF GRADING:**
    DURING THE COURSE OF CONSTRUCTION, THE AMOUNT OF DISTURBED AREA SHALL BE KEPT TO A MINIMUM AND SHALL BE LIMITED TO THE AREA SHOWN AS "LIMITS OF GRADING" ON THIS SHEET OF THE EROSION CONTROL PLANS.

MAINTENANCE

1. THE CONTRACTOR SHALL BE RESPONSIBLE FOR INSTALLATION AND MAINTENANCE OF THE TEMPORARY E.S.C. MEASURES.
2. SEDIMENT BARRIERS SHALL BE INSPECTED IMMEDIATELY AFTER EACH RUNOFF-PRODUCING RAINFALL AND AT LEAST DAILY DURING PROLONGED RAINFALL.
3. NECESSARY REPAIRS TO BARRIERS OR REPLACEMENT OF FILTER FABRIC SHALL BE ACCOMPLISHED PROMPTLY.
4. SEDIMENT DEPOSITS SHOULD BE REMOVED AFTER EACH RUNOFF-PRODUCING RAINFALL. DEPOSITS MUST BE REMOVED WHEN THE LEVEL OF DEPOSITION REACHES APPROXIMATELY 1/2 THE HEIGHT OF THE BARRIER.
5. ANY SEDIMENT DEPOSITS REMAINING IN PLACE AFTER THE E.S.C. STRUCTURE IS NO LONGER REQUIRED SHALL BE DRESSED TO CONFORM TO THE EXISTING GRADE, PREPARED AND SEEDED.
6. ALL TEMPORARY AND PERMANENT E.S.C. PRACTICES SHALL BE MAINTAINED AND REPAIRED AS NEEDED TO ASSURE CONTINUED PERFORMANCE OF THEIR INTENDED FUNCTION.
7. ALL TEMPORARY E.S.C. MEASURES SHALL BE REMOVED WITHIN 30 DAYS AFTER FINAL SITE STABILIZATION IS ACHIEVED OR AFTER THE TEMPORARY BMP'S ARE NO LONGER NEEDED. TRAPPED SEDIMENT SHALL BE REMOVED OR STABILIZED ON SITE. DISTURBED SOIL AREAS RESULTING FROM REMOVAL SHALL BE PERMANENTLY STABILIZED.
8. THE CONTRACTOR SHALL BE RESPONSIBLE FOR CLEANING DIRT, MUD AND OTHER CONSTRUCTION DEBRIS WHICH MAY ACCUMULATE ON PAVED STREETS ADJACENT TO THE SITE AS A RESULT OF CONSTRUCTION ACTIVITY. CLEANING SHALL BE ON AN "AS NEEDED" BASIS USING SWEEPING AND WATER TO WASH THE CONSTRUCTION DEBRIS FROM THE STREET.
9. ON-SITE DUST CONTROL SHALL BE ACCOMPLISHED BY USING WATER. APPLICATIONS OF WATER MAY BE REQUIRED SEVERAL TIMES PER DAY DURING CONSTRUCTION ACTIVITY.

CERTIFICATION STATEMENT: I CERTIFY THAT THIS EROSION AND SEDIMENT CONTROL PLAN MEETS THE E.S.C. REQUIREMENTS AS LISTED IN CHAPTER 4.5 OF THE SPOKANE COUNTY AND CITY OF SPOKANE VALLEY GUIDELINES FOR STORMWATER MANAGEMENT.

ENGINEER — SANDRA R.F. RASKELL, P.E.

SPOKANE COUNTY ENGINEERS OFFICE
OFFICIAL PUBLIC DOCUMENT ORIGINAL
CONSTRUCTION PLANS
PROJECT #: P-1957
DATE ACCEPTED: 7-5-06
ACCEPTANCE EXPIRES: 7-5-08
PROJECT LANE MILES PUBLIC: 61
PROJECT LANE MILES PRIVATE: N/A
CONSTRUCTION DOCUMENTATION AND CERTIFIED RECORD DRAWINGS, "AS-BUILTS" ARE REQUIRED PRIOR TO COUNTY ACCEPTANCE AND ESTABLISHMENT OF THE ROADS AND DRAINAGE FACILITIES FOR MAINTENANCE.
PERMIT REQUIRED! (509) 477-3300
NOTIFY PERMIT ENGINEER 48 BUSINESS DAYS PRIOR TO

SANDRA R.F. RASKELL — STATE OF WASHINGTON — REGISTERED PROFESSIONAL ENGINEER
6/7/06
EXPIRES 1/15/08

THE DESIGN IMPROVEMENTS SHOWN IN THIS SET OF PLANS AND CALCULATIONS CONFORM TO APPLICABLE EDITIONS OF THE CITY OF SPOKANE VALLEY STANDARDS FOR ROAD AND SEWER CONSTRUCTION AND THE CITY OF SPOKANE VALLEY GUIDELINES FOR STORMWATER MANAGEMENT. ALL DESIGN DEVIATIONS HAVE BEEN APPROVED BY THE CITY OF SPOKANE VALLEY ENGINEER. I APPROVE THESE PLANS FOR CONSTRUCTION.

ROADWAY
SPOKANE COUNTY ENGINEERING
1026 WEST BROADWAY AVENUE
SPOKANE, WASHINGTON 99260
PHONE: 509-477-3600
CONTACT: MATT ZARECOR, P.E.

BUILDING OFFICIAL
SPOKANE COUNTY BUILDING AND PLANNING
1026 WEST BROADWAY AVENUE
SPOKANE, WASHINGTON 99260
PHONE: 509-477-7200

SEWER
SPOKANE COUNTY UTILITIES
1026 WEST BROADWAY AVENUE
SPOKANE, WASHINGTON 99260
PHONE: 509-477-3604
FAX: 509-477-4715
CONTACT: BILLY URHAUSEN

FIRE DEPARTMENT
FIRE DISTRICT NO. 1
EAST 10319 SPRAGUE AVENUE
SPOKANE VALLEY, WA 99206
PHONE: 509-928-1700
FAX: 509-892-4125
CONTACT: KEVIN MILLER

TELEPHONE
QWEST
904 NORTH COLUMBUS
SPOKANE, WASHINGTON, 99202
PHONE: 509-455-2580
FAX: 509-455-2104
CONTACT: DAVE CLARK

WATER PURVEYOR
CONSOLIDATED IRRIGATION
120 N. GREENACRES ROAD
GREENACRES, WA 99016
PHONE: 509-924-3655
FAX: 509-924-3927
CONTACT: BOB ASHCROFT

POWER
AVISTA UTILITIES
1411 EAST MISSION AVENUE
SPOKANE, WA 99220-3727216
PHONE: 509-495-4715
CONTACT: CHRIS FRACZ

CABLE
COMCAST BROADBAND
1717 EAST BUCKEYE
SPOKANE, WASHINGTON, 99207
PHONE: 509-484-4931
EXTENSION: 53254
CONTACT: JOEL BROST

NATURAL GAS
AVISTA UTILITIES
1411 EAST MISSION AVENUE
SPOKANE, WA 99220
PHONE: 509-495-4774
FAX: 509-495-8713
CONTACT: LOIS McCAIN

SOLID WASTE
WASTE MANAGEMENT
SPOKANE, WASHINGTON
PHONE: 509-466-3400

DEPT. OF HEALTH
SPOKANE COUNTY
1101 WEST COLLEGE AVENUE
SPOKANE, WA 99260
PHONE: 509-324-1560 EXT. 1
CONTACT: DON COPLEY

OWNER
MIKE SCHMITZ
5527 NORTH HAYFORD ROAD
SPOKANE, WA 99224
PHONE: (509) 462-9313
CONTACT: MIKE SCHMITZ

SURVEYOR
LANDTEK, LLC
619 NORTH MADELIA STREET
SPOKANE, WASHINGTON 99202
PHONE: 509-926-2821
FAX: 509-926-2736
CONTACT: BRUCE R. LARSEN, P.L.S.

INSPECTION
ALLWEST
1010 N. LAKE ROAD
SPOKANE, WASHINGTON 99212
PHONE: 509-534-4411
FAX: 509-534-9326
CONTACT: PAUL T. NELSON, P.E.

COUNTY DATUM
BASED ON NORTH AMERICAN VERTICAL DATUM OF 1988 (NAVD-88).
ORIGINATING FROM COUNTY BENCH MARK #57. ELEV=2051.01

DEVELOPER'S APPROVAL — 6-28-06 DATE

NO.	DATE	BY	REVISIONS
4	06/08	GFR	FINAL MYLARS FOR APPROVAL
3	05/24	GFR	2ND PLAN SUBMITTAL FOR REVIEW
2	05/12	GFR	1ST PLAN SUBMITTAL FOR REVIEW
1	04/17	GFR	ORIGINAL PLAN PREPARATION

SCALE:
HORIZONTAL: N.A.
VERTICAL: N.A.

PROJ #: 2004-83
DATE: 05/12/06
DRAWN: GFR
APPROVED: SRFR

WCE
WHIPPLE CONSULTING ENGINEERS
CIVIL AND TRANSPORTATION ENGINEERING
13218 E. SPRAGUE AVENUE
SPOKANE VALLEY, WASHINGTON 99216
PH: 509-893-2617 FAX: 509-926-0227

STREET AND DRAINAGE PLANS
MICA VIEW MEADOWS
EROSION CONTROL PLAN
SPOKANE COUNTY WASHINGTON

SHEET 13 OF 14
JOB NUMBER 2004-83

P-1957 Eng Road-Drainage

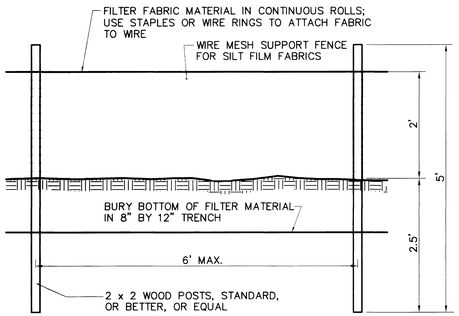

ELEVATION

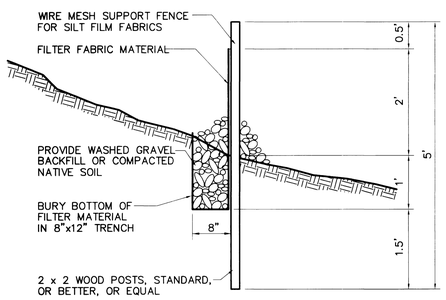

SILT FENCE DETAIL (1)

NOT TO SCALE

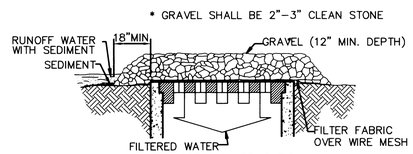

SPECIFIC APPLICATION

THIS METHOD OF INLET PROTECTION IS APPLICABLE WHERE HEAVY CONCENTRATED FLOWS ARE EXPECTED, BUT NOT WHERE PONDING AROUND THE STRUCTURE MIGHT CAUSE EXCESSIVE INCONVENIENCE OR DAMAGE TO ADJACENT STRUCTURES AND UNPROTECTED ACRES.

GRAVEL AND WIRE MESH INLET SEDIMENT FILTER (3)

NOT TO SCALE

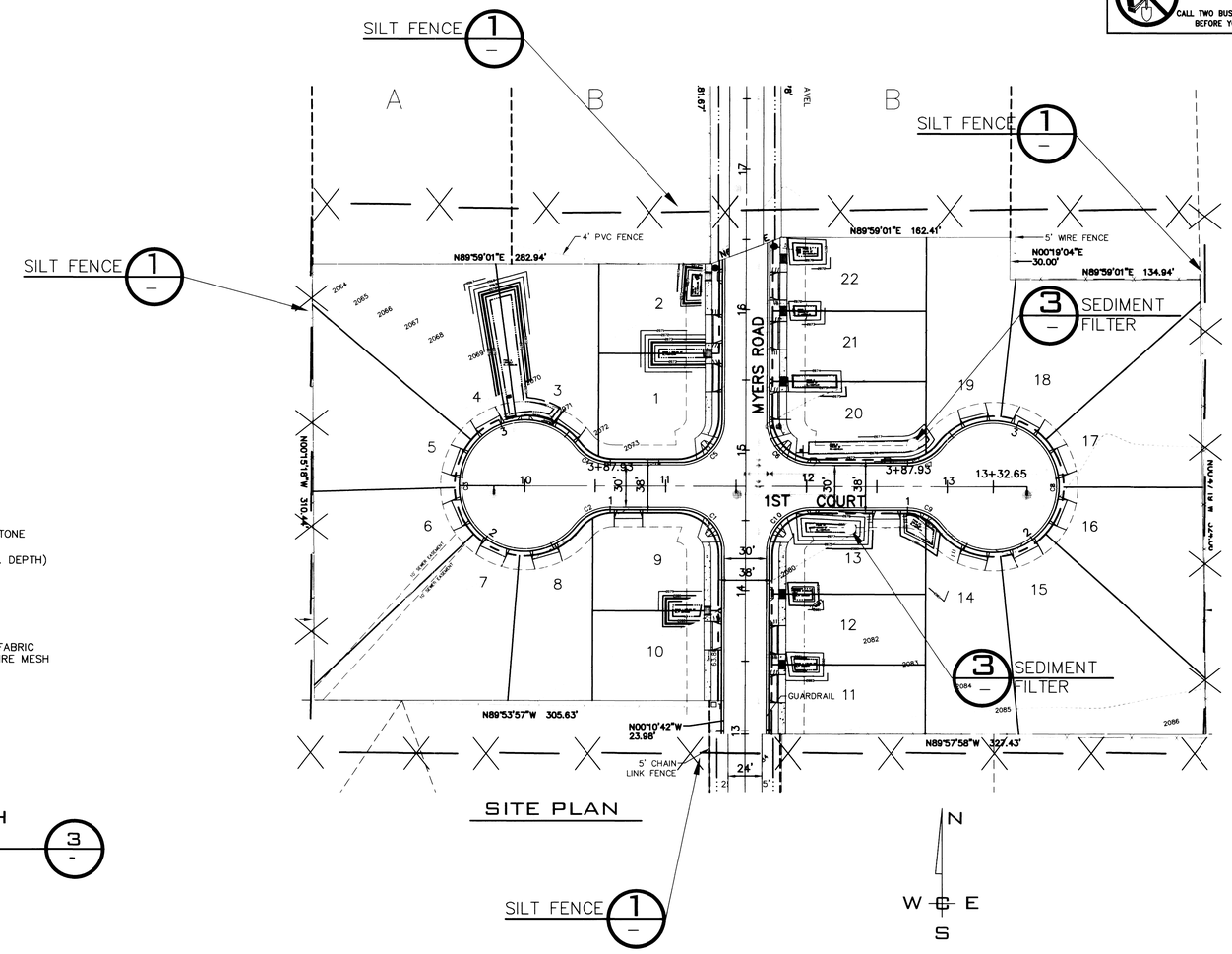

SITE PLAN

GRAPHIC SCALE

50 0 25 50 100

(IN FEET)
1 inch = 50 ft.

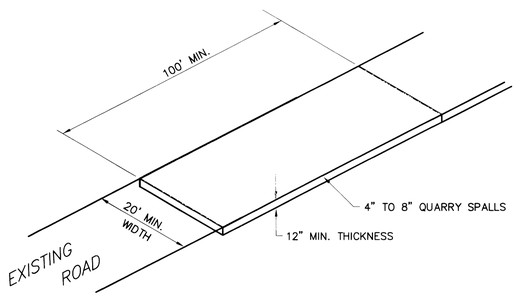

ROCK CONSTRUCTION ENTRY (2)

NOT TO SCALE

LEGEND

- GRAVEL AND WIRE MESH INLET SEDIMENT FILTER
- SILT FENCE. SEE DETAIL 1 AND GENERAL NOTE 5.
- ROCK CONSTRUCTION ENTRY. SEE DETAIL 2 AND GENERAL NOTE 6.
- TRUCK WASH DOWN AND STORAGE AREAS

UNDERGROUND SERVICE ALERT
ONE-CALL NUMBER
456·8000
CALL TWO BUSINESS DAYS BEFORE YOU DIG

SPOKANE COUNTY ENGINEERS OFFICE
OFFICIAL PUBLIC DOCUMENT ORIGINAL
CONSTRUCTION PLANS
PROJECT #: P-1957
DATE ACCEPTED: 7-3-06
ACCEPTANCE EXPIRES: 7-3-08
PROJECT LANE MILES PUBLIC: 1.61
PROJECT LANE MILES PRIVATE: N/A
CONSTRUCTION DOCUMENTATION AND CERTIFIED RECORD DRAWINGS, "AS-BUILTS" ARE REQUIRED PRIOR TO COUNTY ACCEPTANCE AND ESTABLISHMENT OF THE ROADS AND DRAINAGE FACILITIES FOR MAINTENANCE.
PERMIT REQUIRED (509) 477-3600
NOTIFY PERMIT EXPIRES 3 DAYS PRIOR TO

SANDRA R. F. RASKALL
STATE OF WASHINGTON
PROFESSIONAL ENGINEER
EXPIRES 1/15/08

COUNTY DATUM
BASED ON NORTH AMERICAN VERTICAL DATUM OF 1988 (NAVD-88). ORIGINATING FROM COUNTY BENCH MARK #57. ELEV=2051.01

DEVELOPER'S APPROVAL — DATE 6-28-06

NO.	DATE	BY	REVISIONS
4	06/08	GFR	FINAL MYLARS FOR APPROVAL
3	05/24	GFR	2ND PLAN SUBMITTAL FOR REVIEW
2	05/12	GFR	1ST PLAN SUBMITTAL FOR REVIEW
1	04/17	GFR	ORIGINAL PLAN PREPARATION

SCALE: HORIZONTAL: 1"=50' VERTICAL: N.A.

PROJ #: 2004-83
DATE: 05/12/06
DRAWN: GFR
APPROVED: SRFR

WCE
WHIPPLE CONSULTING ENGINEERS
CIVIL AND TRANSPORTATION ENGINEERING
13218 E. SPRAGUE AVENUE
SPOKANE VALLEY, WASHINGTON 99216
PH: 509-893-2617 FAX: 509-926-0227

STREET AND DRAINAGE PLANS
MICA VIEW MEADOWS
EROSION CONTROL DETAILS
SPOKANE COUNTY WASHINGTON

SHEET 14 OF 14
JOB NUMBER 2004-83

P1957 Eng Road Drainage