UNDERGROUND SERVICE ALERT
ONE-CALL NUMBER
1 800
424 5555
CALL TWO BUSINESS DAYS
BEFORE YOU DIG

SEC. 13, T.26 N., R.42 E., W.M.
SPOKANE COUNTY, WASHINGTON

JESSE'S BLUFF 1ST ADDITION

STORMWATER ADDENDUM 2
JARED COURT

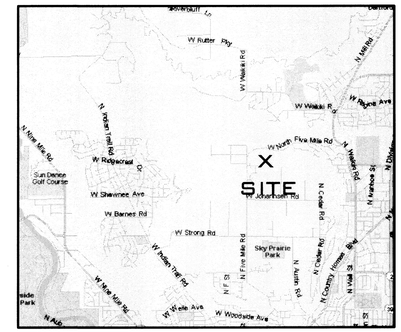

VICINITY MAP
NOT TO SCALE

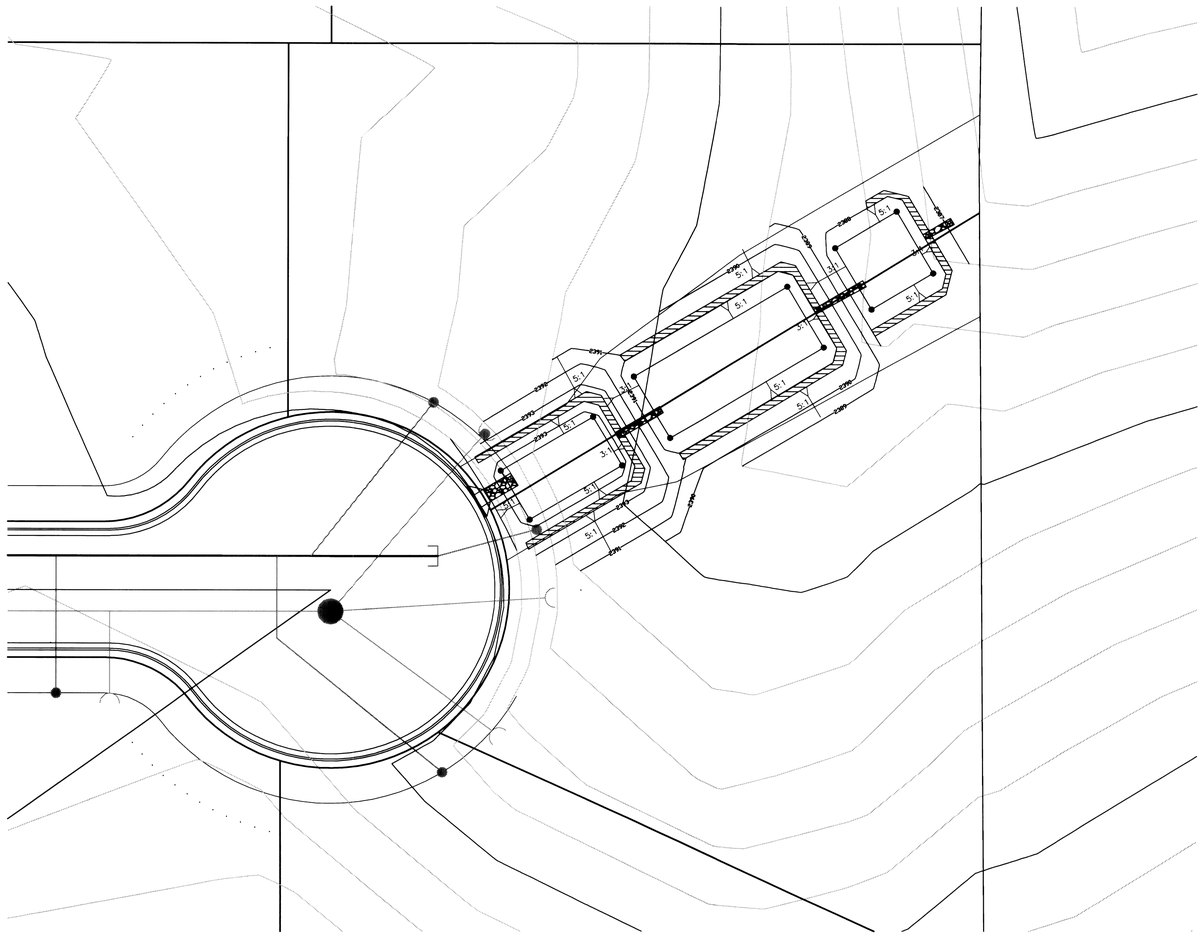

SPOKANE COUNTY ENGINEERS OFFICE
OFFICIAL PUBLIC DOCUMENT ORIGINAL
CONSTRUCTION PLANS
PROJECT #: P1621C
DATE ACCEPTED: 7-27-05
ACCEPTANCE EXPIRES: 7-27-07
PROJECT LANE MILES PUBLIC: 0.71
PROJECT LANE MILES PRIVATE: 0
CONSTRUCTION DOCUMENTATION AND CERTIFIED RECORD DRAWINGS, "AS-BUILTS" ARE REQUIRED PRIOR TO COUNTY ACCEPTANCE AND ESTABLISHMENT OF THE ROADS AND DRAINAGE FACILITIES FOR MAINTENANCE.
PERMIT REQUIRED! (509) 477-3600
NOTIFY PERMIT ENGINEER 2 BUSINESS DAYS PRIOR TO CONSTRUCTION

OWNER

NAME: Robert Heitman, Jr.
ADDRESS: 8225 North Division St.
PHONE #: (509) 467-2123

OFFICIAL CONTACT

NAME: John Saywers
ADDRESS: 327 West 8th Ave. Ste. #240
PHONE #: (509) 744-0300

TABLE OF CONTENTS

COVER SHEET — 1
DRAINAGE PLAN & PROFILE — 2
POND DETAILS — 3

GRAPHIC SCALE
40 0 20 40 80
(IN FEET)
1 inch = 40 ft.

DEVELOPER'S APPROVAL

7-1-05
DATE

SEC
Saywers Engineering Consultants
327 West 8th Avenue
Suite #240
Spokane, WA 99204
(509) 744-0300
(509) 744-0302 Fax

NO	REVISION	DATE
1	COUNTY SUBMITTAL	6/10/05
2	POND REVISIONS	6/24/05
3	FINAL SUBMITTAL	7/1/05

JARED COURT STORM DRAINAGE PLAN
JESSE'S BLUFF 1ST ADDITION
COVER SHEET
SPOKANE COUNTY WASHINGTON

JOHN FRANK SAYWERS
STATE OF WASHINGTON
36212
REGISTERED
PROFESSIONAL ENGINEER
7/1/05
EXPIRES 5/18/06

Job no.

DRAWN BY:	DESIGNED BY:
GLA	JFS
CHECKED BY:	Date
JFS	6/10/05

sheet 1 OF 3

P-1631C Eng Road Drainage

UNDERGROUND SERVICE ALERT
ONE-CALL NUMBER
1 800
424 5555
CALL TWO BUSINESS DAYS
BEFORE YOU DIG

SEC. 13, T.26 N., R.42 E., W.M.
SPOKANE COUNTY, WASHINGTON

GRAPHIC SCALE
30 0 15 30 60
(IN FEET)
1 inch = 30 ft.

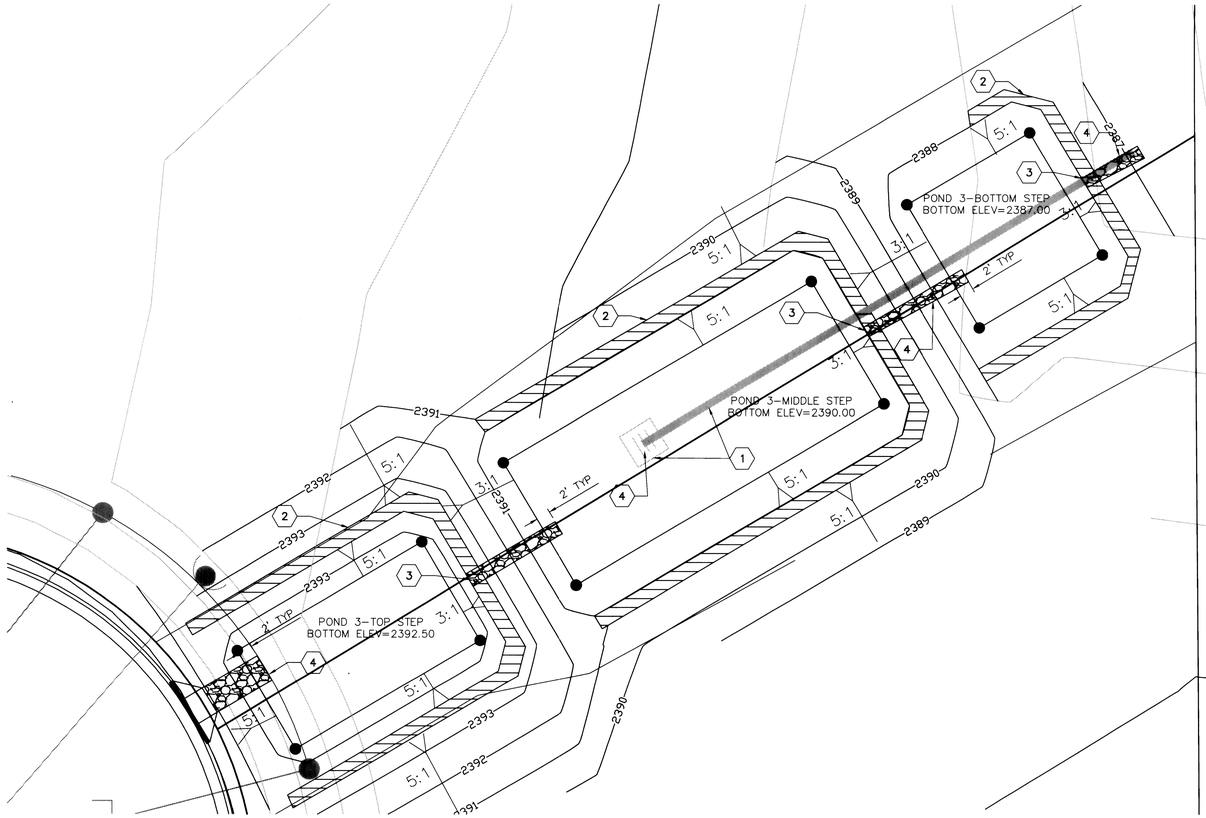

DEVELOPER'S APPROVAL

7-1-05
DATE

CONSTRUCTION NOTES

1. REMOVE EXISTING CATCH BASIN AND PIPE.
2. CONSTRUCT TWO FOOT WIDE EARTH BERM WITH 3:1 SIDE SLOPES BETWEEN PONDS AND 5:1 SLOPES ON SIDES OF POND AND TO EXISTING GRADE. TOP ELEVATION PER PROFILE.
3. CONSTRUCT WEIR PER DETAIL ON SHEET 3. INVERT ELEVATION AND WIDTH PER POND DETAIL, SHEET 3.
4. INSTALL 1" DIAMETER RIP RAP, 6" THICK FROM INVERT OF WEIR 2' INTO POND AREA. WIDTH OF RIP RAP PAD TO EQUAL WIDTH OF WEIR OR CURB DROP.

SPOKANE COUNTY ENGINEERS OFFICE
OFFICIAL PUBLIC DOCUMENT ORIGINAL
CONSTRUCTION PLANS
PROJECT #: P16316
DATE ACCEPTED: 7-27-06
ACCEPTANCE EXPIRES: 7-27-07
PROJECT LANE MILES PUBLIC: 0.71
PROJECT LANE MILES PRIVATE: 0
CONSTRUCTION DOCUMENTATION AND CERTIFIED RECORD DRAWINGS, "AS-BUILTS" ARE REQUIRED PRIOR TO COUNTY ACCEPTANCE AND ESTABLISHMENT OF THE ROADS AND DRAINAGE FACILITIES FOR MAINTENANCE.
PERMIT REQUIRED! (509) 477-3600
NOTIFY PERMIT ENGINEER 2 BUSINESS DAYS PRIOR TO CONSTRUCTION

GRAPHIC SCALE
20 0 10 20 40
(IN FEET)
1 inch = 20 ft.

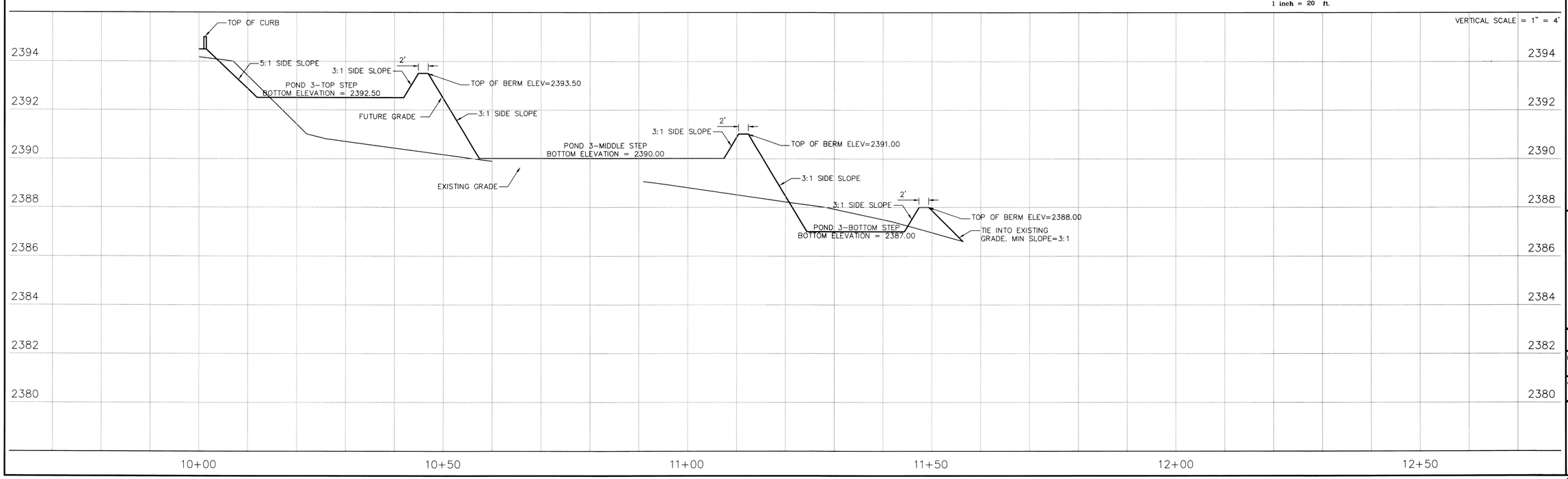

SEC
Sawyers Engineering Consultants
527 West 8th Avenue
Suite #240
Spokane, WA 99204
(509) 744-0300
(509) 744-0302 Fax

NO	REVISION	DATE
1	COUNTY SUBMITTAL	6/10/05
2	POND REVISIONS	6/24/05
3	FINAL SUBMITTAL	7/1/05

JARED COURT STORM DRAINAGE PLAN
JESSE'S BLUFF 1ST ADDITION
PLAN AND PROFILE
SPOKANE COUNTY WASHINGTON

JOHN FRANK SAWYERS
STATE OF WASHINGTON
36212
REGISTERED
PROFESSIONAL ENGINEER
7/1/05
EXPIRES 5/18/06

Job no.

DRAWN BY:	DESIGNED BY:
GLA	JFS
CHECKED BY:	Date
JFS	6/10/05

2 OF 3
sheet

P-16316 Eng Road Drainage

SEC. 13, T.26 N., R.42 E., W.M.
SPOKANE COUNTY, WASHINGTON

UNDERGROUND SERVICE ALERT
ONE-CALL NUMBER
1 800
424 5555
CALL TWO BUSINESS DAYS BEFORE YOU DIG

GRAPHIC SCALE

40 0 20 40 80

(IN FEET)
1 inch = 40 ft.

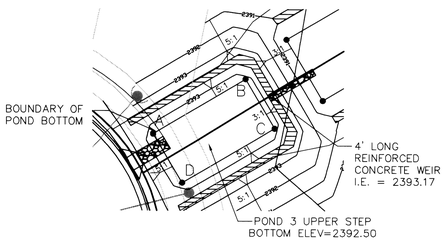

POND 3 UPPER STEP		
POINT	STATION	OFFSET
A	16+28.81	33.37' LT
B	16+54.63	48.64' LT
C	16+62.78	34.87' LT
D	16+36.96	19.60' LT

POND 3 UPPER STEP AREA TABLE	
POINTS	LENGTH
A–B	30'
B–C	16'
C–D	30'
D–A	16'

POND 3 UPPER STEP DETAIL

POND BOTTOM ELEVATION = 2392.50
POND BOTTOM AREA = 480 sq. ft.
POND BOTTOM PERIMETER = 92 ft
PROVIDED VOLUME = 654 cu. ft.
MINIMUM BERM ELEVATION = 2393.5.00
50–YEAR MAX WATER SURFACE ELEV = 2393.41
SIDE SLOPES = 5:1; EXCEPT 3:1 BETWEEN LEVELS

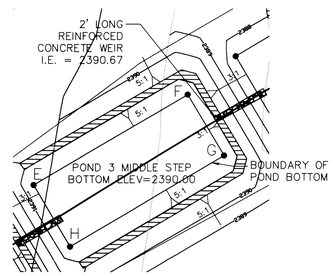

POND 3 MIDDLE STEP		
POINT	STATION	OFFSET
E	16+66.02	59.84' LT
F	17+09.05	85.31' LT
G	17+19.23	68.09' LT
H	16+76.20	42.63' LT

POND 3 MIDDLE STEP AREA TABLE	
POINTS	LENGTH
E–F	50'
F–G	20'
G–H	50'
H–E	20'

POND 3 MIDDLE STEP DETAIL

POND BOTTOM ELEVATION = 2390.00
POND BOTTOM AREA = 1,000 sq. ft.
POND BOTTOM PERIMETER = 140 ft
PROVIDED VOLUME = 1,168 cu. ft.
MINIMUM BERM ELEVATION = 2391.00
50–YEAR MAX WATER SURFACE ELEV = 2390.88
SIDE SLOPES = 5:1; EXCEPT 3:1 BETWEEN LEVELS

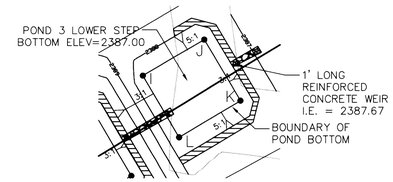

POND 3 LOWER STEP		
POINT	STATION	OFFSET
I	17+22.42	96.08' LT
J	17+39.64	106.27' LT
K	17+49.82	89.05' LT
L	17+32.61	78.87' LT

POND 3 LOWER STEP AREA TABLE	
POINTS	LENGTH
I–J	20'
J–K	20'
K–L	20'
L–I	20'

POND 3 LOWER STEP DETAIL

POND BOTTOM ELEVATION = 2387.00
POND BOTTOM AREA = 400 sq. ft.
POND BOTTOM PERIMETER = 80 ft
PROVIDED VOLUME = 514 cu. ft.
MINIMUM BERM ELEVATION = 2388.00
50–YEAR MAX WATER SURFACE ELEV = 2387.86
SIDE SLOPES = 5:1; EXCEPT 3:1 BETWEEN LEVELS

NOTES:

1. POND STATIONS AND OFFSETS BASED ON THE CENTERLINE OF JARED COURT.

2. SOIL TESTS ARE REQUIRED IN THE TOP POND LEVEL. WHERE SOIL TESTS ARE REQUIRED, ONE (1) TEST EACH FOR CATION EXCHANGE CAPACITY AND SOIL ORGANIC MATTER SHALL BE PERFORMED FOR EACH GRASSED PERCOLATION AREA 1500 S.F. OR LESS. AN ADDITIONAL SET OF TESTS MAY BE REQUIRED FOR EACH ADDITIONAL 2,000 S.F. OR FRACTION THEREOF. TESTS SHALL BE PERFORMED ON A WELL–MIXED COMPOSITE SAMPLE CONSISTING OF THE TOP SIX (6) INCHES OF SOIL FROM AT LEAST FOUR (4) CORES UNIFORMLY DISTRIBUTED OVER THE PERCOLATION AREA. IF THE AVERAGE CATION EXCHANGE CAPACITY IS 15 MILLEQUIVALENTS/100 g OR MORE OR THE SOIL IS 2% ORGANIC CARBON OR MORE, THE SOIL WILL BE CONSIDERED SUITABLE FOR STORMWATER TREATMENT.

SPOKANE COUNTY ENGINEERS OFFICE
OFFICIAL PUBLIC DOCUMENT ORIGINAL
CONSTRUCTION PLANS
PROJECT #: P1631C
DATE ACCEPTED: 7-27-05
ACCEPTANCE EXPIRES: 7-27-07
PROJECT LANE MILES PUBLIC: 0.71
PROJECT LANE MILES PRIVATE: 0
CONSTRUCTION DOCUMENTATION AND CERTIFIED RECORD DRAWINGS, "AS-BUILTS" ARE REQUIRED PRIOR TO COUNTY ACCEPTANCE AND ESTABLISHMENT OF THE ROADS AND DRAINAGE FACILITIES FOR MAINTENANCE.
PERMIT REQUIRED! (509) 477-3699
NOTIFY PERMIT ENGINEER 2 BUSINESS DAYS PRIOR TO CONSTRUCTION

STORM DRAINAGE NOTES

1. SEE PLAN AND PROFILE SHEET FOR CATCH BASIN TYPES AND LOCATIONS.

2. PONDS SHALL BE CONSTRUCTED PER THE REQUIREMENTS OF THESE DRAWINGS INCLUDING GRADING AND SEEDING REQUIREMENTS.

3. ALL '208' PONDS SHOWN SHALL BE ROUGH GRADED PRIOR TO PAVING OF ADJACENT ROADWAY.

4. CONTRACTOR SHALL PROVIDE SPOKANE COUNTY WITH AS–BUILT IRRIGATION PLANS UPON COMPLETION OF ALL POND CONSTRUCTION.

5. ALL PONDS WITHIN THE COUNTY RIGHT–OF–WAY, IN THE AREA ASSOCIATED WITH THIS PROJECT, SHALL BE COMPLETED DURING THE CONSTRUCTION OF THE ROADWAY. THE CONTRACTOR SHALL PERFORM THE POND GRADE WORK, INSTALL THE IRRIGATION SYSTEM, AND SEED THE PONDS WITH DRYLAND GRASS SEED MIX FOLLOWING THE ROAD PAVING WORK.

6. THE CONTRACTOR SHALL MAKE AN EFFORT TO PROTECT ALL DRAINAGE STRUCTURES FROM BEING CONTAMINATED WITH SILT BY INSTALLING FILTER FABRIC UNDER THE LID FOR AT LEAST 6 WEEKS, OR UNTIL THE ESTABLISHMENT OF GRASS AND/OR OTHER SITE CONSTRUCTION WORK HAS ENDED. IN THE EVENT THAT SILT OR OTHER DELETERIOUS MATERIAL IS ALLOWED TO ENTER THE CATCH BASINS, THE CONTRACTOR WILL BE REQUIRED TO CLEAN THE CATCH BASIN OUT TO THE SATISFACTION OF THE CERTIFYING ENGINEER.

7. THE FLOOR OF A GRASSED PERCOLATION AREA (GPA) SWALE INCLUDES THE LEVEL PORTION OF THE FLOOR OF THE SWALE AND THE SIDESLOPES OF THE SWALE UP TO THE GPA OVERFLOW ELEVATION OR THE INVERT OF THE LOWEST ORIFICE IN THE OUTLET STRUCTURE. THE SOIL LOCATED IN THE FLOOR OF THE GPA SWALE SHALL BE A MEDIUM TO WELL–DRAINING MATERIAL, WITH A MINIMUM INFILTRATION RATE OF 0.5 INCHES PER HOUR. THE ENGINEER SHALL PROVIDE A WRITTEN STATEMENT WHICH VERIFIES THAT ALL GPA SWALES CONFORM TO THIS REQUIREMENT. THIS WRITTEN STATEMENT SHALL BE SUBMITTED TO THE SPOKANE COUNTY ENGINER'S OFFICE PRIOR TO INSTALLING FINISHED LANDSCAPING/SOD AND PRIOR TO FINAL ACCEPTANCE. THE SWALE FLOOR MATERIAL SHALL BE INSTALLED TO A NATIVE SOIL STRATUM WHICH ALSO MEETS OR EXCEEDS THIS MINIMUM PERCOLATION RATE OF 0.5 INCHES PER HOUR.

8. ALL '208' PONDS SHALL BE SEEDED WITH A DRYLAND GRASS SEED MIX PER SPOKANE COUNTY STANDARDS:

DRYLAND GRASS SEED MIX
SPOKANE COUNTY PUBLIC WORKS, FEBRUARY 1998

GRASS SEED: PROVIDE FRESH, CLEAN, NEW CROP SEED COMPLYING WITH TOLERANCE OF PURITY AND GERMINATION ESTABLISHED BY THE OFFICIAL SEED ANALYSIS OF NORTH AMERICA. PROVIDE SEED MIXTURE COMPOSED OF GRASS SPECIES AND PERCENTAGES AS FOLLOWS:

20%	ELKA PERENNIAL RYE
20%	DURAR HARD FESCUE
45%	COVAR SHEEP/FESCUE
15%	REUBENS CANADIAN BLUEGRASS

PROVIDE MIXTURE COMPOSED OF GRASS SEED AND FERTILIZER IN PERCENTAGES AS FOLLOWS:

GRASS SEED: 90 LBS. PER ACRE
FERTILIZER: 16–16–16 TIMES RELEASE COMPOSITION, 300 LBS. PER ACRE

ALL SEEDING OF SLOPES SHALL BE DONE IN ACCORDANCE WITH THE W.S.D.O.T. STANDARD SPECIFICATIONS, SEC. 8–01.

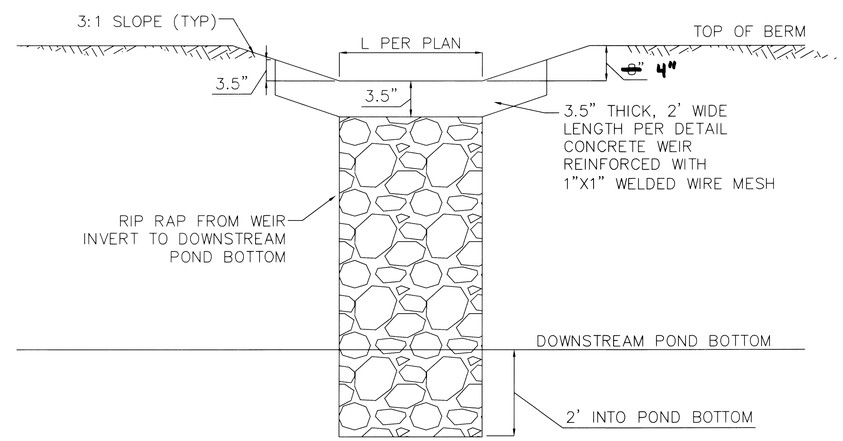

TYPICAL REINFORCED CONCRETE WEIR DETAIL

1 / —

NOT TO SCALE

DEVELOPER'S APPROVAL

7-1-05
DATE

SEC
Sauvers Engineering Consultants
327 West 8th Avenue
Suite #240
Spokane, WA 99204
(509) 744-0300
(509) 744-0302 Fax

NO	REVISION	DATE
1	COUNTY SUBMITTAL	6/10/05
2	POND RESPONSES	6/24/05
3	FINAL SUBMITTAL	7/1/05

JARED COURT STORM DRAINAGE PLAN
JESSE'S BLUFF 1ST ADDITION
POND DETAILS
SPOKANE COUNTY WASHINGTON

JOHN FRANK SAUVERS
STATE OF WASHINGTON
36212
REGISTERED PROFESSIONAL ENGINEER
7/1/05
EXPIRES 5/18/06

Job no.

DRAWN BY:	DESIGNED BY:
GLA	JFS
CHECKED BY:	Date
JFS	6/10/05

P-1631C Eng Road & Drainage