SEE SHEET 2 FOR TYPICAL ROAD CROSS SECTION

CALL BEFORE YOU DIG 456-8000

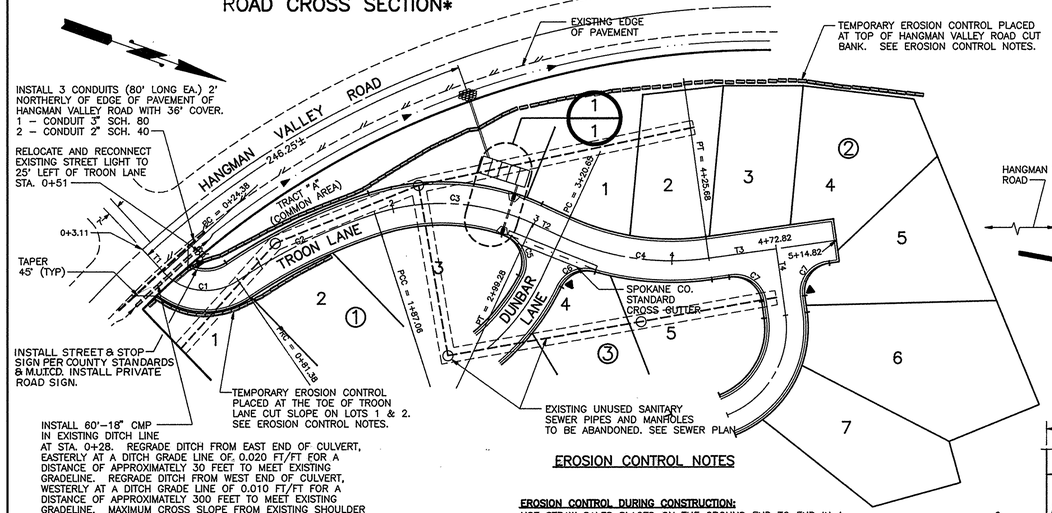

TANGENT INFORMATION

LINE	DIRECTION	DISTANCE
T1	137°22'52"	21.27'
T2	114°50'46"	21.37'
T3	262°02'17"	47.14'
T4	172°02'17"	30.00'

CURVE INFORMATION

CURVE	RADIUS	LENGTH	TANGENT	CHORD	DELTA
C1	40.00'	57.00'	34.56'	52.30'	81°38'46"
C2	365.28'	105.68'	53.21'	105.32'	16°34'37"
C3	151.16'	112.22'	58.84'	109.66'	42°32'04"
C4	183.43'	105.03'	54.00'	103.60'	32°48'30"
C5*	20.00'	34.54'	23.40'	30.41'	98°57'48"
C6*	20.00'	28.05'	16.89'	25.81'	80°21'13"
C7*	20.00'	31.42'	20.00'	28.28'	90°00'00"

* RADIUS TO BACK OF WEDGE CURB

COUNTY DATUM

HANGMAN HILLS DEVELOPMENT–CONTROLLED BY INVERT ELEV. OF 1998.03 FOR MANHOLE #60 PER SHEET 20 OF SEWER PLANS BY SARGENT F. RAMER.

Judy L. Hart — DEVELOPER'S APPROVAL

9/28/92 — DATE

SEC. 28, T.24 N., R.43 E.,W.M.

EROSION CONTROL NOTES

EROSION CONTROL DURING CONSTRUCTION:
USE STRAW BALES PLACED ON THE GROUND END TO END IN A CONTINUOUS ROW AT THE LOCATIONS DESIGNATED FOR "TEMPORARY EROSION CONTROL". SILT AND OTHER DEBRIS RETAINED ON UPHILL SIDE OF STRAW BALES SHALL BE REMOVED PERIODICALLY AS DEPTH OF SILT RETAINED REACHES ONE HALF THE HEIGHTH OF THE STRAW BALE. BALES MAY BE REMOVED AS PERMANENT FACILITIES ARE COMPLETED.

PERMANENT EROSION CONTROL:
AFTER COMPLETION OF ALL ROADWAY AND UTILITY CONSTRUCTION, SEED ALL PUBLIC AND PRIVATE ROADWAY CUT BACK SLOPES AND FILL EMBANKMENTS WHICH EXCEED 2:1 SLOPE AND WHICH WERE DISTURBED DURING CONSTRUCTION. SEED MIXTURE SHOULD BE STREAMBANK WHEATGRASS (SODAR) 33.3%, TALL WHEATGRASS (ALKAR) 33.3%, AND INTERMEDIATE WHEATGRASS (GREENAR) 33.4%. APPLICATION SHALL BE AT THE RATE OF 60 LBS. SEED MIXTURE PER ACRE AND SHALL INCLUDE A FERTILIZER MIX WHICH YIELDS 135 LBS./ACRE TOTAL NITROGEN AS N, 80 LBS./ACRE AVAILABLE AS PHOSPHORIC ACID P205, AND 80 LBS./ACRE SOLUBLE POTASH AS K20.

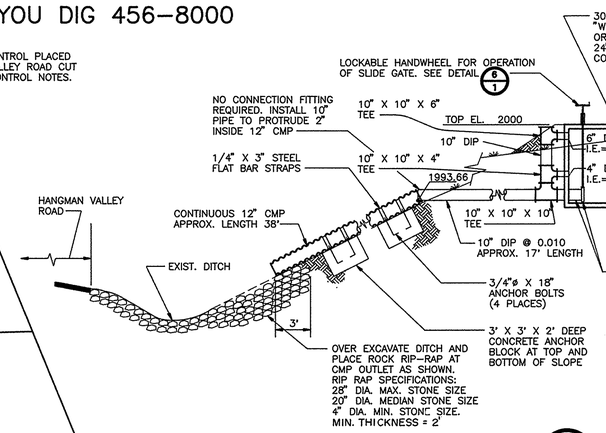

SECTION 2/1
NTS

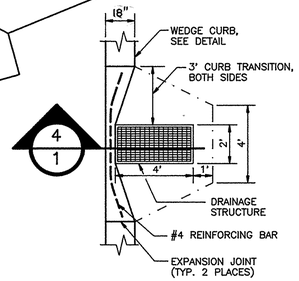

CURB TRANSITION DETAIL 3/1
NTS

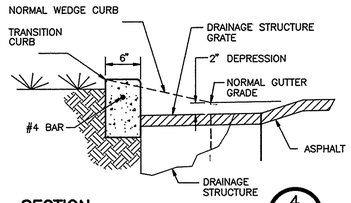

SECTION 4/1
NTS

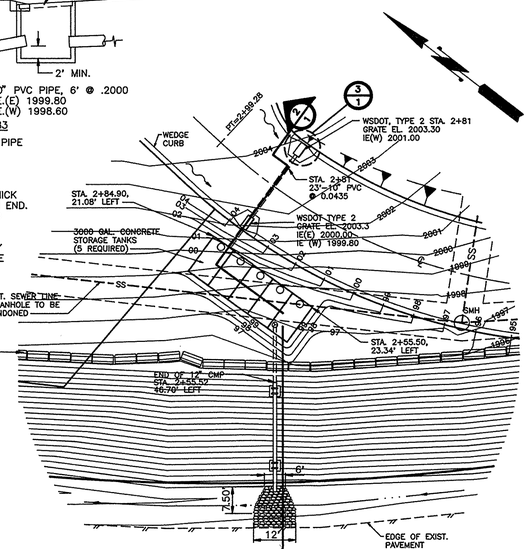

RETENTION DETAIL 1/1
1"=20'

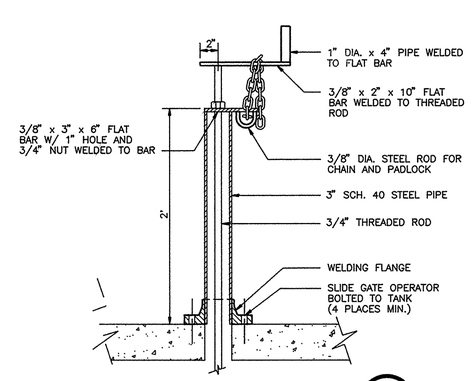

GATE OPERATOR DETAIL 6/1
NTS

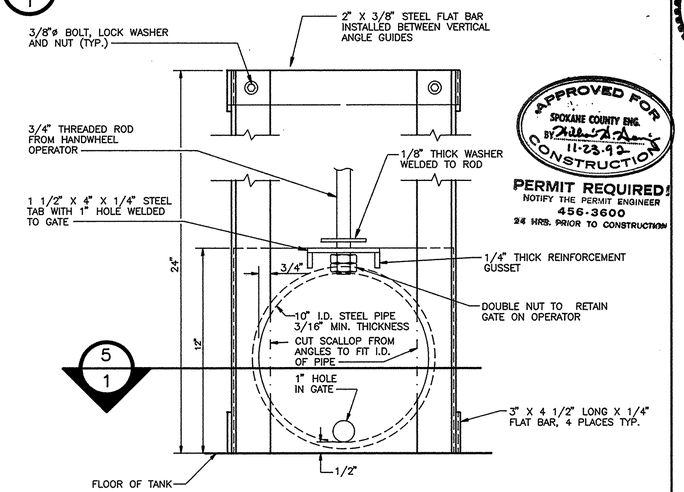

APPROVED FOR CONSTRUCTION — SPOKANE COUNTY ENG. — 11-23-92

PERMIT REQUIRED! NOTIFY THE PERMIT ENGINEER 456-3600 24 HRS. PRIOR TO CONSTRUCTION

SLIDE GATE DETAIL–FRONT VIEW 5/1
NTS

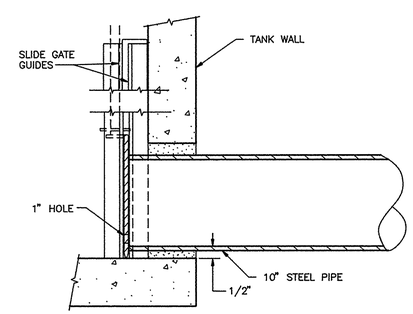

SLIDE GATE DETAIL–SIDE VIEW
NTS

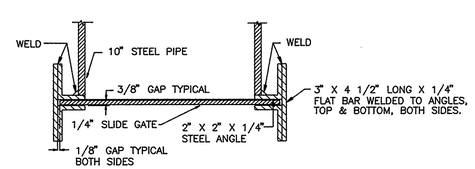

SECTION VIEW 5/1
NTS

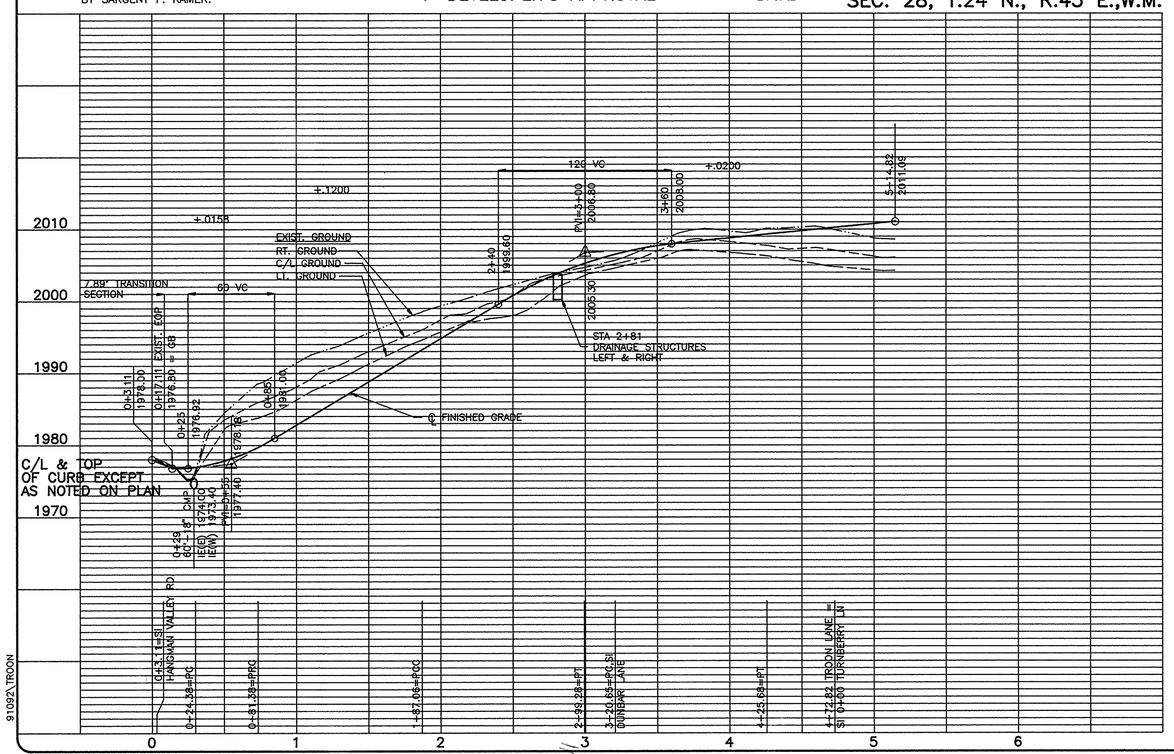

91092\TROON

SCALE	
HORIZONTAL	1"=50'
VERTICAL	1"=10'

DATE	9/23/92
DWN.	JFC
CHK.	PJM
APP.	RLM

REVISIONS

NO.	DATE	BY

REGISTERED PROFESSIONAL ENGINEER — RICHARD L. MASON — STATE OF WASHINGTON — 16117 — EXPIRES 11/17/92

INLAND PACIFIC ENGINEERING
South 25 Altamont Spokane, Washington 99202
(509) 535-1410

EAGLE HEIGHTS ADDITION TO HANGMAN HILLS
TROON LANE — STREET

SHEET 1 OF 2

JOB NUMBER 91092

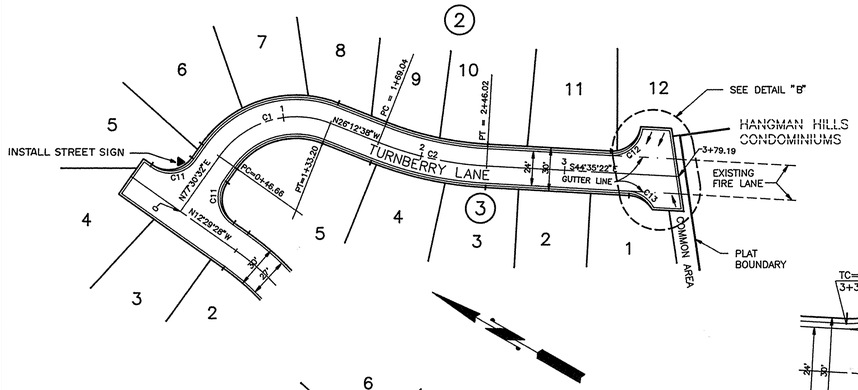

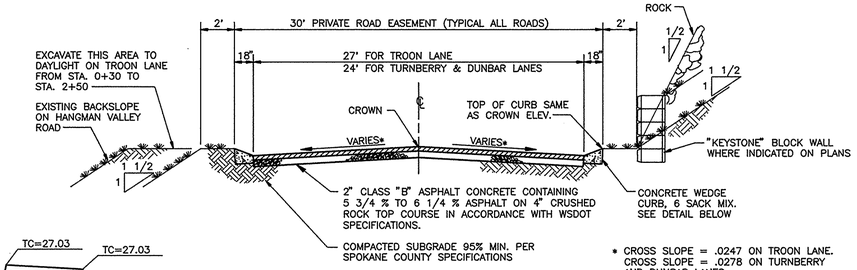

* CROSS SLOPE = .0247 ON TROON LANE.
CROSS SLOPE = .0278 ON TURNBERRY AND DUNBAR LANES.

TYPICAL STREET CROSS SECTION
FOR ALL STREETS

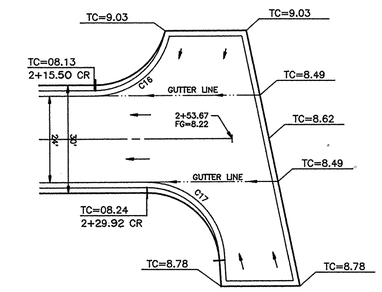

DETAIL "A"
1"=20'

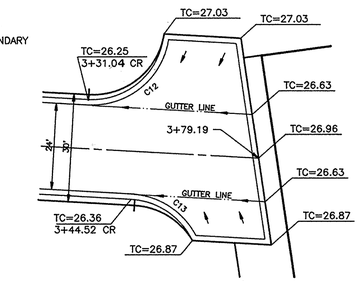

DETAIL "B"
1"=20'

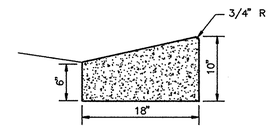

WEDGE CURB

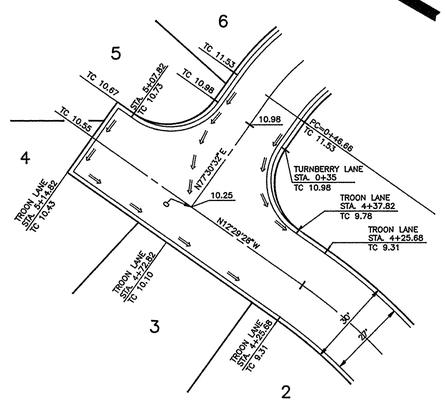

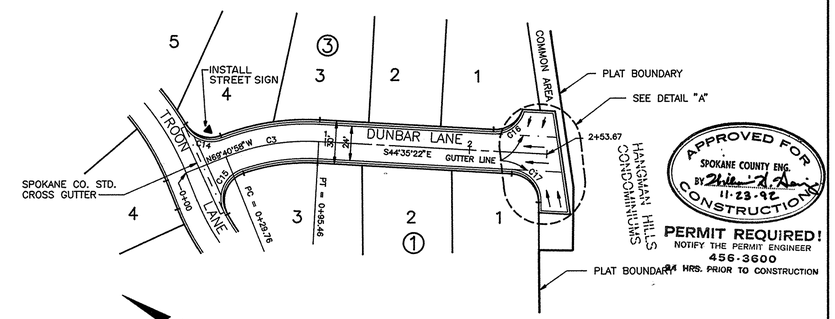

APPROVED FOR CONSTRUCTION
SPOKANE COUNTY ENG.
BY 11-23-92

PERMIT REQUIRED!
NOTIFY THE PERMIT ENGINEER
456-3600
24 HRS. PRIOR TO CONSTRUCTION

CURVE INFORMATION

CURVE	RADIUS	LENGTH	TANGENT	CHORD	DELTA
C1	65.00'	86.54'	51.04'	80.29'	76°16'50"
C2	240.00'	76.99'	38.83'	76.66'	18°22'44"
C3	150.00'	65.69'	33.38'	65.17'	25°05'36"
C11*	20.00'	31.42'	20.00'	28.28'	90°00'00"
C12*	20.00'	29.41'	18.09'	26.83'	84°15'39"
C13*	20.00'	19.60'	10.67'	18.82'	56°08'43"
C14*	20.00'	28.05'	16.89'	25.81'	80°21'13"
C15*	20.00'	34.54'	23.40'	30.41'	98°57'48"
C16*	20.00'	26.36'	15.49'	24.49'	75°31'21"
C17*	20.00'	30.23'	18.85'	27.44'	86°36'47"

* DENOTES RADIUS FROM BACK OF WEDGE CURB

COUNTY DATUM
HANGMAN HILLS DEVELOPMENT–CONTROLLED BY INVERT ELEV. OF 1998.03 FOR MANHOLE #60 PER SHEET 20 OF SEWER PLANS BY SARGENT F. RAMER.

SEC. 28, T.24 N., R.43 E.,W.M.

CALL BEFORE YOU DIG 456–8000

DEVELOPER'S APPROVAL

9/27/92
DATE

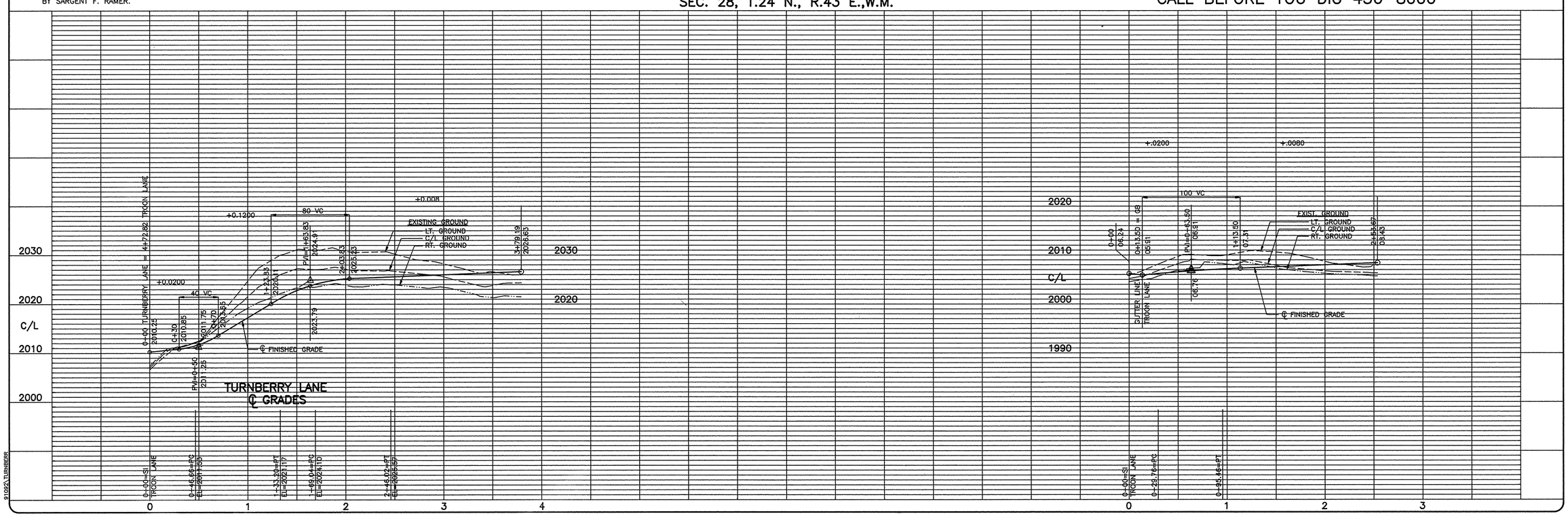

NO.	DATE	BY	REVISIONS

SCALE: HORIZONTAL 1"=50' VERTICAL 1"=10'
DATE 9/23/92 DWN. JFC CHK. PJM APP. RLM

INLAND PACIFIC ENGINEERING
South 25 Altamont Spokane, Washington 99202
(509) 535-1410

EAGLE HEIGHTS ADDITION
TO HANGMAN HILLS
TURNBERRY LANE
AND
DUNBAR LANE
STREET

SHEET 2 OF 2
JOB NUMBER 91092

91092\TURNBERR

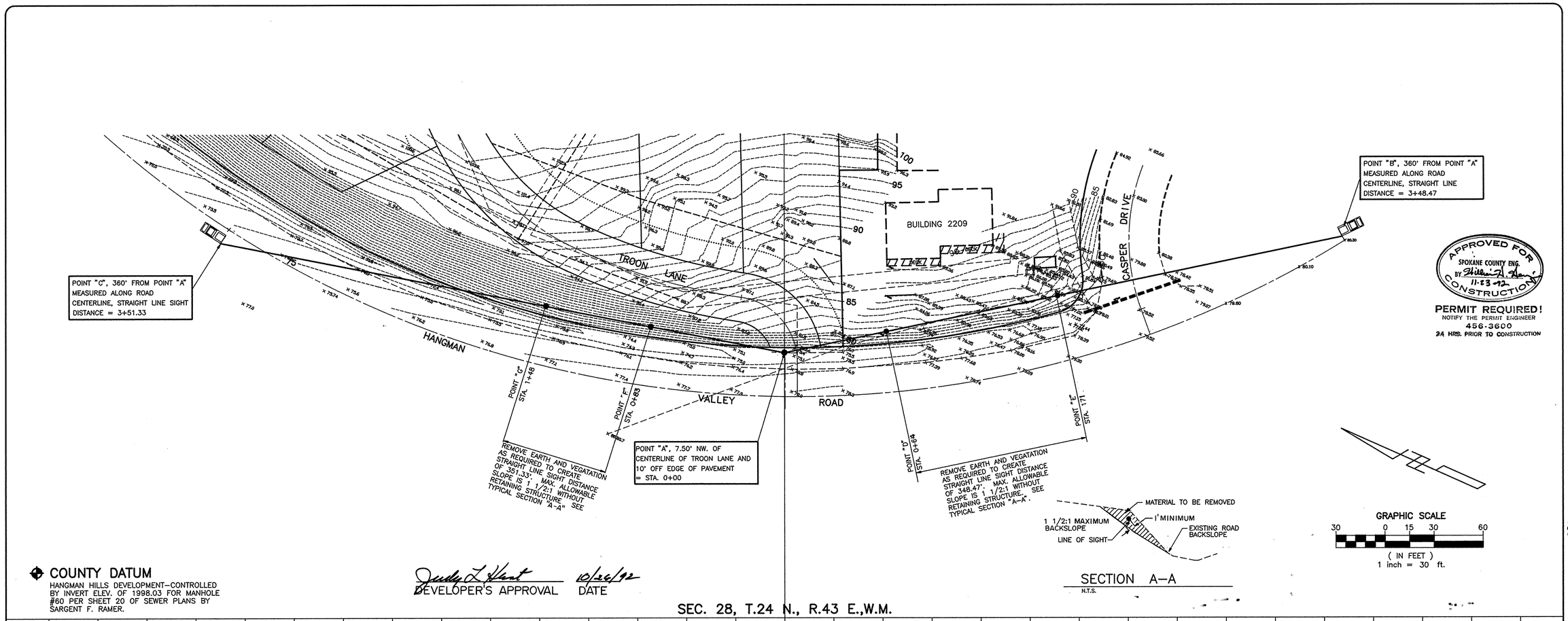

COUNTY DATUM

HANGMAN HILLS DEVELOPMENT-CONTROLLED BY INVERT ELEV. OF 1998.03 FOR MANHOLE #60 PER SHEET 20 OF SEWER PLANS BY SARGENT F. RAMER.

Judy L Hunt 10/26/92
DEVELOPER'S APPROVAL DATE

SEC. 28, T.24 N., R.43 E.,W.M.

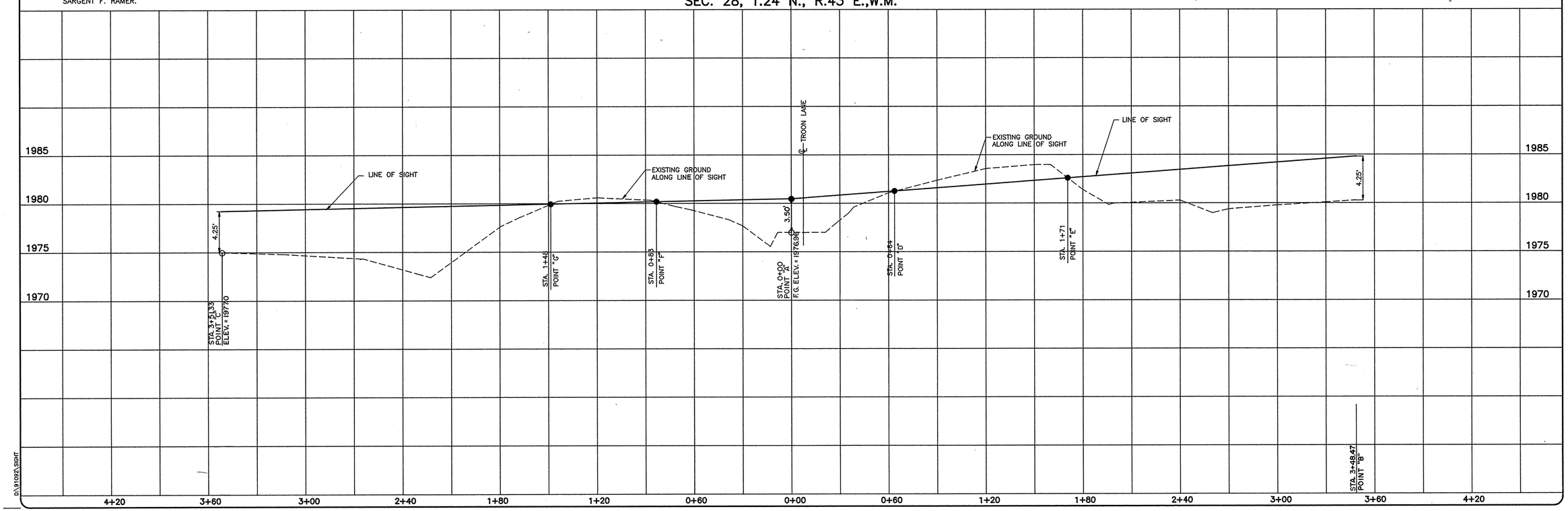

D:\91092\SIGHT

SCALE HORIZONTAL 1"=30' VERTICAL 1"=5'

DATE 09-23-92
DWN. RLM
CHK. PM
APP. DLM

NO.	DATE	BY	REVISIONS

RICHARD L. MASON STATE OF WASHINGTON REGISTERED PROFESSIONAL ENGINEER 11-23-92

INLAND PACIFIC ENGINEERING
South 25 Altamont Spokane, Washington 99202
(509) 535-1410

EAGLE HEIGHTS P.U.D.
SIGHT DISTANCE PROFILES FOR TROON LANE @ INTERSECTION OF HANGMAN VALLEY ROAD
MISC.

SHEET 1 OF 1
JOB NUMBER 91092