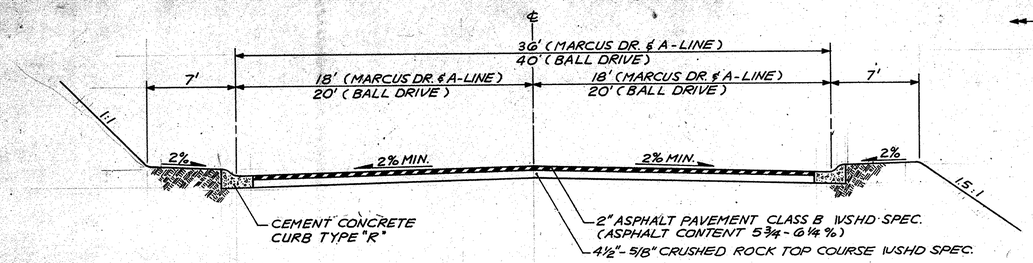

TYPICAL ROADWAY SECTION

N.T.S.

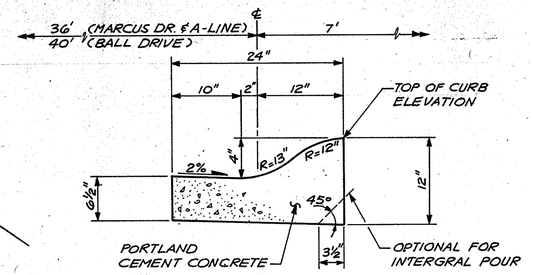

TYPE "R" CONCRETE CURB DETAIL

N.T.S.

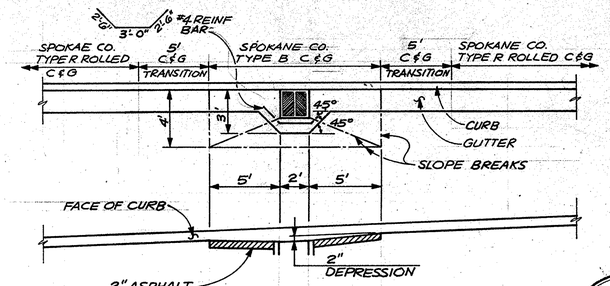

GUTTER DEPRESSION

N.T.S.

APPROVED FOR CONSTRUCTION
R. S. TURNER
SPOKANE COUNTY ENG.
BY
5-23-84

PERMIT REQUIRED!
NOTIFY THE PERMIT ENGINEER
456-3600
24 HRS. PRIOR TO CONSTRUCTION

DETENTION POND SCHEDULE										
POND *	BOTTOM LENGTH	BOTTOM WIDTH (A)	DESIGN DEPTH (B)	BOTTOM OF POND ELEV. (E) **	OVERFLOW PIPE STORAGE "K"	ORIFICE DIAMETER	OUTLET PIPE SIZE	MIN. SLOPE (S)	"H"	EMERGENCY OVERFLOW PIPE
A	60'	25'	7.0'	2025.00	4.0'	8"	15"	3%	36"	24"
B	65'	30'	6.5'	2227.00	3.5'	*	21"	5%	36"	36"
C	80'	10'	6.0'	2249.00	3.9'	*	15"	10%	25.2"	24"

* SEE SHEET 2 AND 3 FOR LOCATIONS.
** ADJUST IN FIELD WHERE NECESSARY TO FIT EXISTING CONDITIONS.

* TO BE DETERMINED BY THE ENGINEER

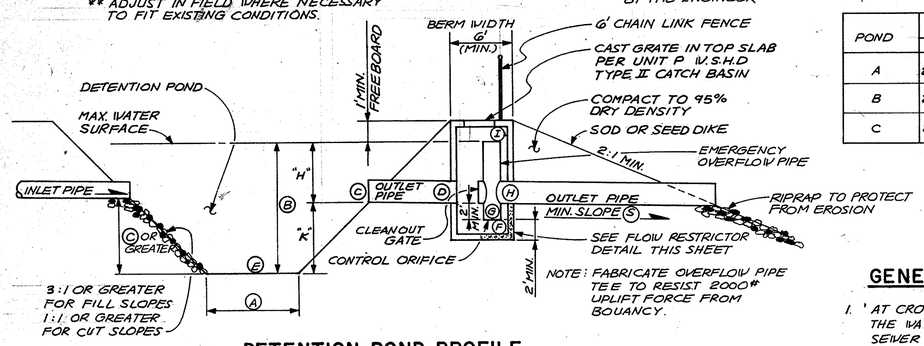

DETENTION POND PROFILE

N.T.S.

POND	POINT ELEVATION				
	C	D&H	F	G	I
A	2029.0	2028.9	2024.9	2026.9	2028.0
B	2230.5	2230.1	2226.1	2228.1	2233.5
C	2252.9	2252.0	2248.0	2250.0	2254.1

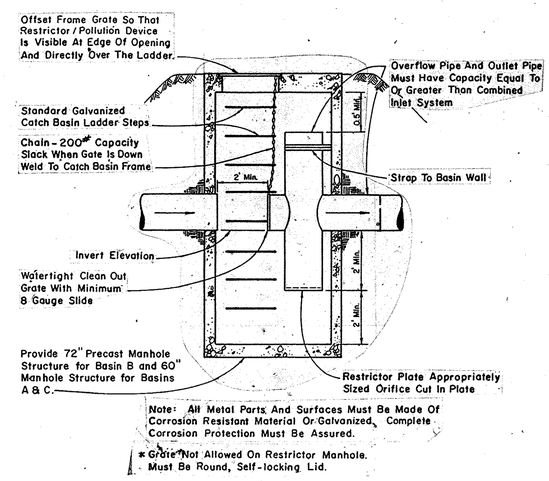

FLOW RESTRICTOR DETAIL

N.T.S.

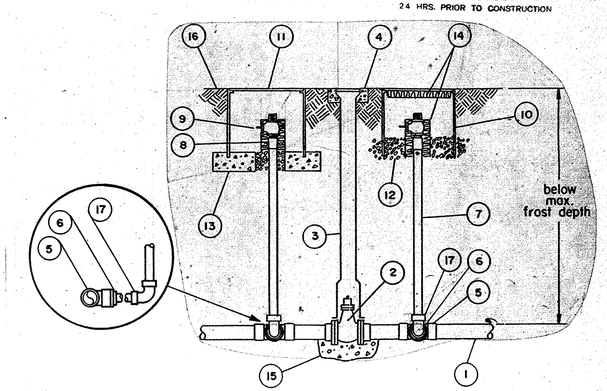

1. LOW PRESSURE SEWER SYSTEM (LPSS) MAIN
2. GATE VALVE - fully ported, size of LPSS main
3. VALVE BOX - length as required
4. CONCRETE COLLAR
5. TEE or SADDLE - size of LPSS main
6. REDUCER - 2" X size of LPSS main
7. 2" RISER
8. THREADED ADAPTER
9. 2" GATE VALVE - wrench operated
10. METER BOX or concrete, steel or aluminum corrugated pipe, etc.
11. COVER - concrete, steel, etc. weatherproof vandalproof
12. GRAVEL BEDDING - for box support, and surface water leaching.
13. CONCRETE PAD - if installed in traffic area, concrete should be used in place of gravel bedding.
14. INSULATION
15. CONCRETE THRUST BLOCK
16. FINISHED GRADE
17. 90° ELBOW

FLUSHING CONNECTION

N.T.S

DEVELOPER APPROVAL
DATE 5/23/84

GENERAL NOTES:

1. AT CROSSINGS OF STORM SEWER & WATER MAINS, LOWER THE WATER MAIN TO PROVIDE 0.5' CLEARANCE TO STORM SEWER PIPE.
2. FOR CURB RETURN INFORMATIONS, SEE SHEET 11A & 11B.
3. ALL CONSTRUCTION ON THIS PROJECT SHALL CONFORM TO "STANDARD SPECIFICATIONS FOR MUNICIPAL PUBLIC WORKS CONSTRUCTION", 1981 EDITION, FOR UTILITY CONSTRUCTION, AND "SPOKANE COUNTY STANDARDS FOR ROADWAY CONSTRUCTION", 1981 EDITION.
4. ALL FIVE HYDRANTS TO USE FLANGED OR THRUST-RODDED SPOOLS.
5. ALL HORIZONTAL AND VERTICAL WATER MAIN AND SEWER FOR MAIN BENDS SHALL HAVE THRUST BLOCK POURED TO UNDISTURBED EARTH.
6. ALL SEWER MANHOLES SHALL HAVE LOCKING COVERS.
7. CONTRACTOR TO BE RESPONSIBLE FOR ALL CONSTRUCTION STAKING EXCEPT CURB & GUTTER. AS BUILT FIELD NOTES OF AT SHEETS AND UTILITIES WILL BE PROVIDED BY THE CONTRACTOR TO THE ENGINEER UPON COMPLETION OF CONSTRUCTION.
8. CONSTRUCTION INSPECTION WILL BE DONE BY VERA W&P AND SPOKANE COUNTY D.P.W. CONTRACTOR IS RESPONSIBLE FOR PROPER NOTIFICATION OF THESE AGENCIES.
9. ALL DISTURBED AREAS OR CUTS AND FILLS SHALL BE FINISHED GRADED AND HYDROSEEDED UNLESS OTHERWISE DIRECTED BY THE OWNER.
10. CONTRACTOR SHALL CONDUCT WATER PECOLOTION TESTS IN THE BOTTOM OF THE DETENTION PONDS IN THE PRESENCE OF THE SPOKANE COUNTY DRAINAGE INSPECTOR.

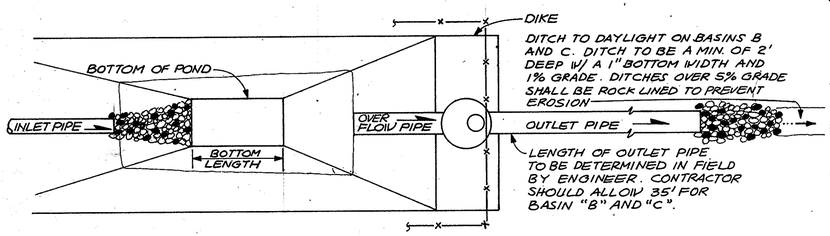

PLAN

TYPICAL DETENTION POND DETAIL

N.T.S.

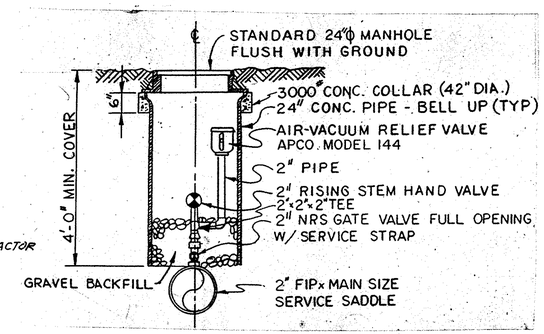

TYPICAL AIR VACUUM RELIEF VALVE FOR WATER LINE

N.T.S.

HILL-TOP ENTERPRISES, INC.

BELLA VISTA - PHASE I

A PLANNED COMMUNITY

Typical Sections and Details

ENTRANCO Engineers
ENVIRONMENTAL AND TRANSPORTATION CONSULTANTS

Drawn By: STV	Date 10.83	Scale: Horiz.	Sheet 1
Designed By: BAM	10.83	Vert.	Of
Checked By: DM	10-83	Job No.: 84006	
Approved By:			

ALEX J. RECTOR STATE OF WASHINGTON REGISTERED PROFESSIONAL ENGINEER

LP1354 UTIL 2.TIF

CURVE DATA				
P.I. STATION	Δ	R	T	L
48+95.97	44°15'00"	300.00'	121.97'	231.69'
51+54.57	22°12'30"	300.00'	58.88'	116.28'
100+80.95	56°42'25"	150.00'	80.95'	148.46'
102+26.32	54°51'47"	150.00'	77.86'	143.63'

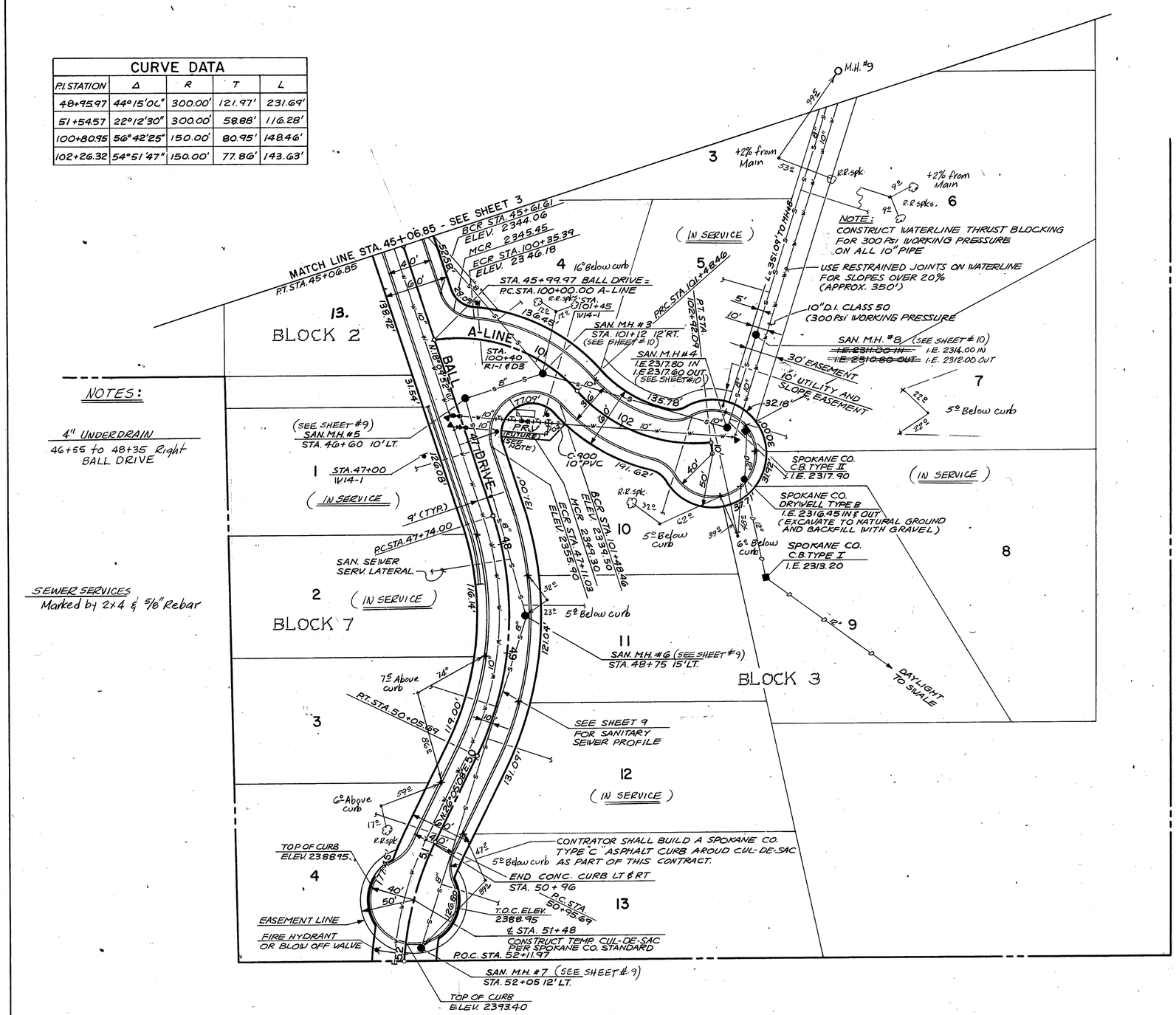

NOTES:

4" UNDERDRAIN
46+55 to 48+35 Right BALL DRIVE

SEWER SERVICES
Marked by 2x4 & 5/8" Rebar

APPROVED FOR CONSTRUCTION
R. S. TURNER
SPOKANE COUNTY ENG.
BY Gary S. Nelson 5-23-84

PERMIT REQUIRED!
NOTIFY THE PERMIT ENGINEER
456-3600
24 HRS. PRIOR TO CONSTRUCTION

DEVELOPER APPROVAL
DATE 5/23/84

HILL-TOP ENTERPRISES, INC.

BELLA VISTA - PHASE I

A PLANNED COMMUNITY

Ball Drive: Sta. 45+06.85 to Sta. 60+00

A-Line: Sta. 100+00 to Sta. 103+91.25

ENTRANCO Engineers
ENVIRONMENTAL AND TRANSPORTATION CONSULTANTS

Drawn By: STV	Date 9.83	Scale: Horiz. 1" = 50' Vert.	Sheet 4
Designed By: BGM	9.83		
Checked By: Pat McC	10.83	Job No.: 84006	Of
Approved By:			

ALEX J. REDFORD
STATE OF WASHINGTON
REGISTERED PROFESSIONAL ENGINEER

LP1354-UTIL-1.TIF

Int.	Date	Dwg.	Eng.

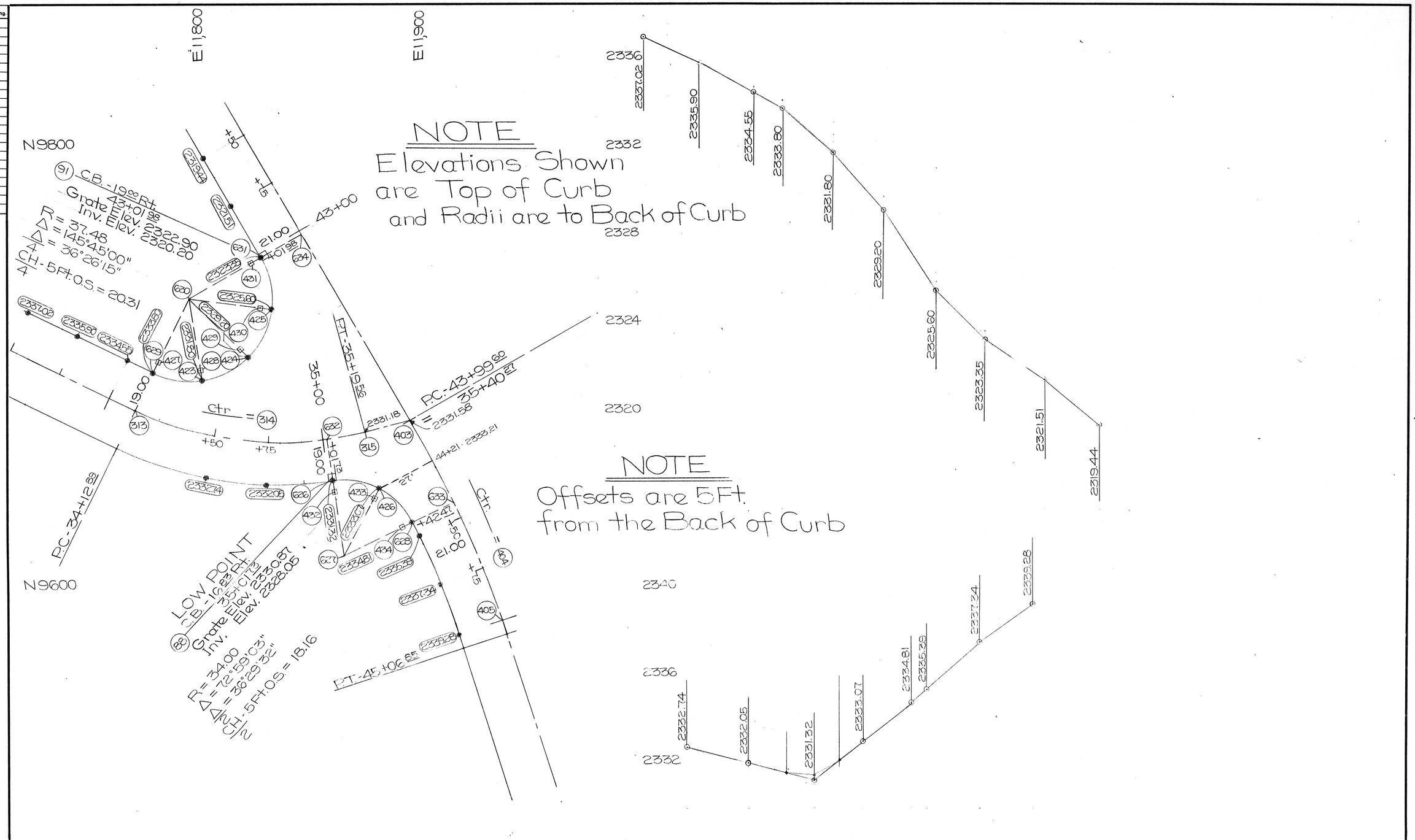

No.	Date	By	Ckd.	Appr.	Revision

Approved By:

Drawn By: TLS Date: 8-25-87
Designed By:
Checked By:
Approved By:

ENTRANCO Engineers
ENVIRONMENTAL AND TRANSPORTATION CONSULTANTS
BELLEVUE WASHINGTON

Scale: 1"
Horiz. 20'
Vert. 2'
Job No.: 34006-40

Bella Vista - Phase 1
CURB RETURNS
Ball Drive & Marcus Drive

Sheet 6 Of 12

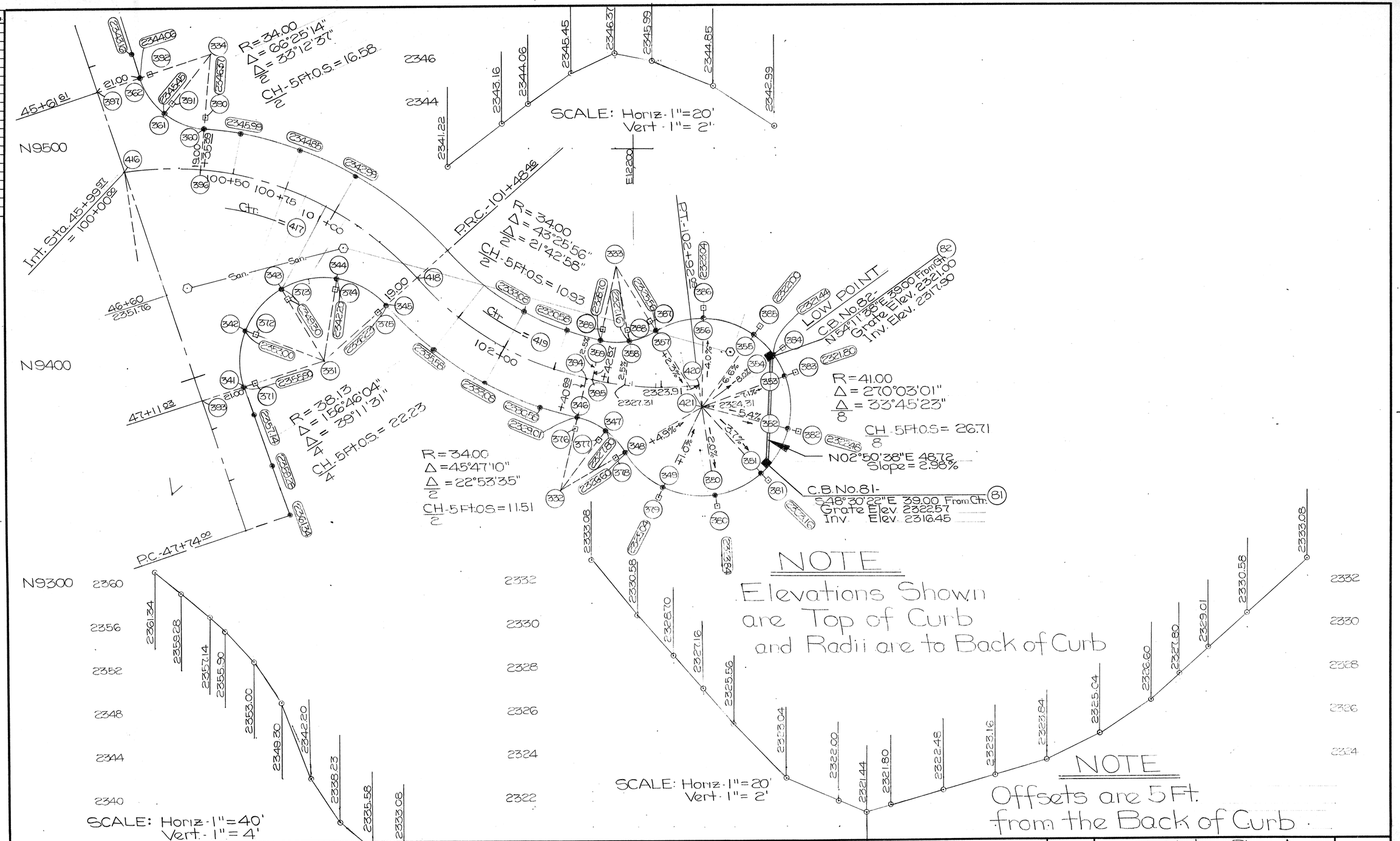

Int.	Date	Dwg.	Eng.

No.	Date	By	Ckd.	Appr.	Revision

Approved By:

Drawn By: TLS Date: 8-23-82
Designed By:
Checked By:
Approved By:

ENTRANCO Engineers
ENVIRONMENTAL AND TRANSPORTATION CONSULTANTS
BELLEVUE WASHINGTON

Scale:
Horiz.
Vert.
Job No.: 84006-40

Bella Vista - Phase 1
CURB RETURNS
Ball Drive & "A" Line

Sheet 7 Of 12